IEEE Access
Multidisciplinary ⋮ Rapid Review ⋮ Open Access Journal

Received February 1, 2019, accepted February 16, 2019, date of publication February 19, 2019, date of current version March 7, 2019.

Digital Object Identifier 10.1109/ACCESS.2019.2900305

A Secured Smart Home Switching System based on Wireless Communications and Self-Energy Harvesting

ADAMU MURTALA ZUNGERU[1], (Senior Member, IEEE), JWAONE GABOITAOLELWE[1], BAKARY DIARRA[2], (Member, IEEE), JOSEPH M. CHUMA[1], (Member, IEEE), LI-MINN ANG[3], (Senior Member, IEEE), LONE KOLOBE[1], MPHO DAVID[1], AND ISHMAEL ZIBANI[4], (Member, IEEE)

[1]Department of Electrical, Computer and Telecommunication Engineering, Botswana International University of Science and Technology, Palapye 10071, Botswana
[2]Department of Electrical Engineering, Institute of Applied Sciences, University of Sciences, Techniques and Technologies of Bamako, Bamako 423, Mali
[3]School of Information and Communication Technology, Griffith University, Southport, QLD 4215, Australia
[4]Department of Electrical Engineering, Faculty of Engineering and Technology, University of Botswana, Gaborone 4775, Botswana.

Corresponding author: Adamu Murtala Zungeru (zungerum@biust.ac.bw)

This work was supported by the Office of Research, Development, and Innovation (ORDI), Botswana International University of Science and Technology, under Grant R0065.

ABSTRACT Due to human influence and its negative impacts on the world's environment, the world is changing into a cleaner and more sustainable energy system. In both private and public buildings, there is a desire to reduce electricity usage, automate appliances, and optimize the electricity usage of a building. This paper presents the design and implementation of a secured smart home switching system based on wireless communications and self-energy harvesting. The proposed secured smart home switching system integrates access control of the building's electricity, energy harvesting, and storage for the active electronic components and circuitries, and wireless communication for smart switches and sockets. The paper gives two contributions to the design of smart home systems: 1) A practical design and implementation of security (access control system) for a building's power supply which adds a locking feature such that only authorized personnel are capable of altering the power state of the smart sockets and switches in a building, and; 2) A model of energy harvesting and storage system for the active electronic components of the circuitries and wireless communication for smart switches and sockets. The access control involves four stages (a control unit, a comparator unit, a memory unit, and the switching unit). The access control system provides means of access control by having a security keypad that switches ON or OFF the building's electricity, provided the user knows the security pin code (8 coded pins). The proposed system also harvests and stores energy for all the active electronic devices using a photovoltaic system with ultracapacitor energy buffer. The designed secured smart home utilized smart power and switches, and message queuing telemetry transport for ease of controlling energy usage. The experimental results obtained from extensive testing of the prototype shows an improvement in security and energy management in a building.

INDEX TERMS Switching system, wireless communication, zigbee protocol, ultracapacitor, energy harvesting, smart switches, smart hub, smart socket, photovoltaic system, security pin code.

I. INTRODUCTION

With the fast development of many wireless devices in recent years, home automation has gained much acceptance, hence, the need for security and energy harvesting systems for active electronic devices. With the advancement in sensor systems, which motivated sensor systems application in military applications, battlefield surveillance has benefited in the same applications [1]. Sensor systems are usually connected via wireless means for such applications and used for several applications ranging from home automation to healthcare and traffic control applications. With the advancement of

The associate editor coordinating the review of this manuscript and approving it for publication was Guangdeng Zong.

2169-3536 © 2019 IEEE. Translations and content mining are permitted for academic research only.
Personal use is also permitted, but republication/redistribution requires IEEE permission.
See http://www.ieee.org/publications_standards/publications/rights/index.html for more information.

wireless communication protocols such as ZigBee protocols deployed for use in wireless sensor networks, opportunities for building wireless control and monitoring applications have now increased and the cost of installation and design tends to be lower, in addition to low power, large range and high reliability [2]. Besides, some applications such as the system for control and monitoring uses ZigBee technology has been implemented in [3], and universal control using ZigBee and remote-control (Infra-red) system technology as in [4]. As reported in [5], is a wireless control system for a power outlet. Also, as the smart home and available smart devices become increasingly popular, most people do tend to require more comfort and home automation devices to upgrade their living spaces to enjoy a high-tech life, hence, leading to the demand to equip the houses with different a kind of sensors and actuators for optimal security and ease of appliances control [6]–[8].

Traditional homes usually provide electricity to electrical devices employing power sockets termed electrical junction. These power sockets only provide a means of electrical distribution to electrical/electronic appliances and are the main electrical component to be improved upon as smart homes are becoming increasingly popular, and hence the need to have them in our homes. The traditional electrical junctions termed power sockets comes with many challenges involving risk of electrical shocks due to human interaction with them and ease of electrical fire outbreak due to frequent failures, short-circuit and malfunctions. Due to the demand for a large number of smart home appliances and consumer electronics to be installed in our homes, energy consumption tends to increase proportionally to the increase in smart home appliances. As a result, an operational cost in the term of energy consumption in our homes also increases [8].

Due to the addition of operational cost, it then calls for an alternate means of reducing the energy consumption cost due to smart devices. However, some part of the world energy production is still occupied by the renewable energy sources, with the hydroelectric plant the most popular followed by the wind and then solar energy. Despite the progress of microelectronics, the typical efficiency of a solar panel is around 20% from sunlight to electrical power. Therefore, to maximize the power produced by the panel, it must be coupled with other electrical devices which help it to maintain relatively constant power over the day. Such devices are implemented in both analog and digital systems and are known as Maximum Power Point Trackers (MPPT).

Many techniques to perform the MPP tracking have been presented in the literature as reported in [9]–[14]. A storage system made of batteries or ultracapacitor is required to compensate for changes in the solar irradiance or night-time power. From the simulation results presented in [1] and [15], this work presents the design of an ultracapacitor charge controller permitting to charge the ultracapacitor during the day and transfer the energy to the load when there is no solar irradiance. As the electronic devices required need two voltage levels, a design of a three winding flyback converter is done and regulated through a PID controller to keep its output constant despite any change in loads or the supply voltage. This paper intends to address some of the challenges of a smart building. The challenges involve enhancing the available smart power sockets and switches with the ability to detect smart sensors' signals to turn off/on devices in addition to reducing energy consumption and increase the safety of human and security in homes. Besides, the work presented in this paper gives a system design to make the electrical supply to the building highly secure. By the introduction of a security code before the electricity distribution board of the house and in-between the sub-system, the system becomes secured.

The proposed smart home switching system introduces main access control of the home's electricity, energy harvesting, and storage for the active electronic components of the circuitries, and wireless communication for smart switches and sockets. A major focus of the proposed system is to create a wireless smart home system with an added functionality of security to a buildings power supply while removing the electrical costs of the active electronic components and wireless communication modules. The main contributions of the paper are to achieve two objectives: (1) A practical design and implementation of security (access control system) for a building's power supply which adds a locking feature such that only authorized personnel is capable of altering the power state of the smart sockets and switches in a building; and (2) A model of energy harvesting and storage system for the active electronic components of the circuitries, and wireless communication for smart switches and sockets.

The access control system contains four stages, such as a control unit, a comparator unit, the memory unit, and the switching unit. However, three stages required to achieve the entire secured automation switching system are: a keypad (password) enabled switching system; remote (infra-red) enabled switching system, and sound enabled switching system. These three stages provide a more secured switching system for home automation. The access control system provides a means of access control by having a security keypad that switches ON or OFF the building's electricity, provided the user knows the security pin code (8 coded pins). However, the system harvests and stores energy for all the active electronic devices using a photovoltaic system with ultracapacitor energy buffer. The system utilized smart power and switches, and Zigbee communication protocol for ease of controlling the energy usage.

The next sections of this paper are structured as follows. Section II gives background information on previous smart home appliance research. Section III presents our proposed secured smart home switching system based on wireless communication and self-energy harvesting. Sections IV give a discussion on hardware verification and a prototype of the proposed system. Section V gives some experimental results and discussions. Finally, Section VI gives some concluding remarks.

II. PREVIOUS WORK ON SMART HOME APPLIANCES

Smart home appliances can be easily controlled using wireless technologies. In this section, we give a brief discussion of some of the existing approaches based on wireless communications for a smart home. Han *et al.* [16] proposed home automation based on energy management schemes that utilize ZigBee wireless communication to minimize standby energy consumption. In their proposed work, power cut-off of standby appliances connected to the power outlet, server, and a ZigBee hub are the major constituents of their system. The power outlet of their system using a ZigBee module tends to break the power mains whenever there is a low energy consumption associated with the devices connected to these power outlets. In the system, the central hub collects information and control the intended power channels using ZigBee module. In a related work, Gill *et al.* [17] also proposed a ZigBee-based home automation system consisting of home network unit and a gateway. The main idea of their approach is the incorporation of interoperability of networks of different structures in the home environment, for which there is not much home automation in their design. Song *et al.* [18] proposed a home monitoring system based on hybrid sensor networks. Their idea of the combination of different sensors in the home monitoring application is to use roaming sensors to move around different locations in the home environment and participates in the network, most especially when the network is disconnected. Also, in [19], a system integrating WSN with a service robot for the smart home monitoring system is proposed for home automation. In a similar work, [20] recommended the use of WSN-based intelligent light control system needed for indoor environments applications, which is towards home energy management for a reduction in energy consumption. Similarly, Suh and Ko [21] proposed an intelligent home control system that utilizes wireless sensor network/actuator network with link quality indicator-based routing protocol. The proposed work intends to enhance network reliability using a link quality indicator approach. Their work is like the work reported by Suh and Ko [21], Nguyen *et al.* [22] that utilizes a rehabilitation-based approach on optical linear encoder (OLE). Even with the advancement of home automation [23], additional functionalities are needed to be able to catch up with fast-growing smart systems. In this, Lien *et al.* [5] have improved upon the earlier work by [23], which developed a system that can be controlled using GSM wireless and Bluetooth technologies. However, authors in [5], [23]–[25] have suggested that home power outlets could better be controlled using power line communication (PLC) module. The authors developed systems to back-up their claims. The more robust system developed by Bai and Hung [26] using Zigbee technology, is one of the few power outlet systems that adapt wireless sensor networks (WSNs) in home automation. Other likes approaches are reported in [27] and [28], which uses Zigbee wireless communication to switch off and on remote outlets, but by using different approaches. Similar to work in [24] and [25], Lien *et al.* [29], Lee *et al.* [30] proposed the use of PLC interfaces embedded system in the smart home. Their system was not only able to switch on and off appliances, but also at the same time, monitor current consumption, and also, adding the feature of sensors in monitoring the living conditions and optimization of energy savings in the smart home. The use of Zigbee technology was also reported in the work of authors in [31]–[34], though, using different approaches. In [35]–[38], wearable devices for monitoring and management of power grid, in addition to musical activities were introduced and reported to aid in improving home automation. A kind of shift approach using the open alternative of Zigbee alliance that includes internet protocol (IP) communication, using IPv6 over low-power wireless personal area networks (6LoWPAN), is reported in [39] and [40]. An extension to the work in [39] and [40], Mattern and Floerkemeier [41] proposed the use of the internet of things (IoT). Various smart sockets and switches that utilizes the Zigbee microcontrollers of frequency 2.4GHz are some of the proposed approaches of authors in [8], [16], [42]–[44]. In their work, simultaneous real-time data on power as well as on and off the appliances were both achieved. In [45]–[49], the use of the analog-to-digital converter (ADC), and wireless power consumption and time-of-use (ToU) were introduced to enhance smart home system development. Though the work in [49] does not include the design of a control unit, hence, sockets cannot be controlled automatically. In a similar approach, Singaravelan and Kowsalya [50] developed a system that can bring down standby power of appliances to zero. However, the work in [50] does not also include real-time power monitoring. Recently, Rahim *et al.* [51] proposed an energy management system using a hybrid scheduling technique with the aim of reduction in electricity consumption cost, peak to average ratio and maximization of user comfort. The authors employ a hybrid scheduling technique, an optimization technique involving the Bacteria foraging algorithm and the Harmony search algorithm. The authors, however, introduce the concept of coordination amongst smart appliances and achieved by the help of the large data generated from the appliances of multiple homes with the joint work of heuristic techniques and Dynamic Programming. The authors evaluated the performance of the proposal, and a comparison was performed with already existing techniques of which the proposal had a significant improvement in energy management and also with the simulated results, their proposed method validates the desired objectives while considering the consumer comfort. In a similar work, a demand-side management scheme proposed by Rahim *et al.* [52], uses elephant herding optimization (EHO) and adaptive cuckoo search (ACS) algorithms to achieve similar objectives. The system's effectiveness regarding electricity utilization cost, peak to average reduction and consumer comfort maximization was achieved. Authors in [53] also proposed a smart power socket and central control system that utilizes the Zigbee communication protocol to control devices connected

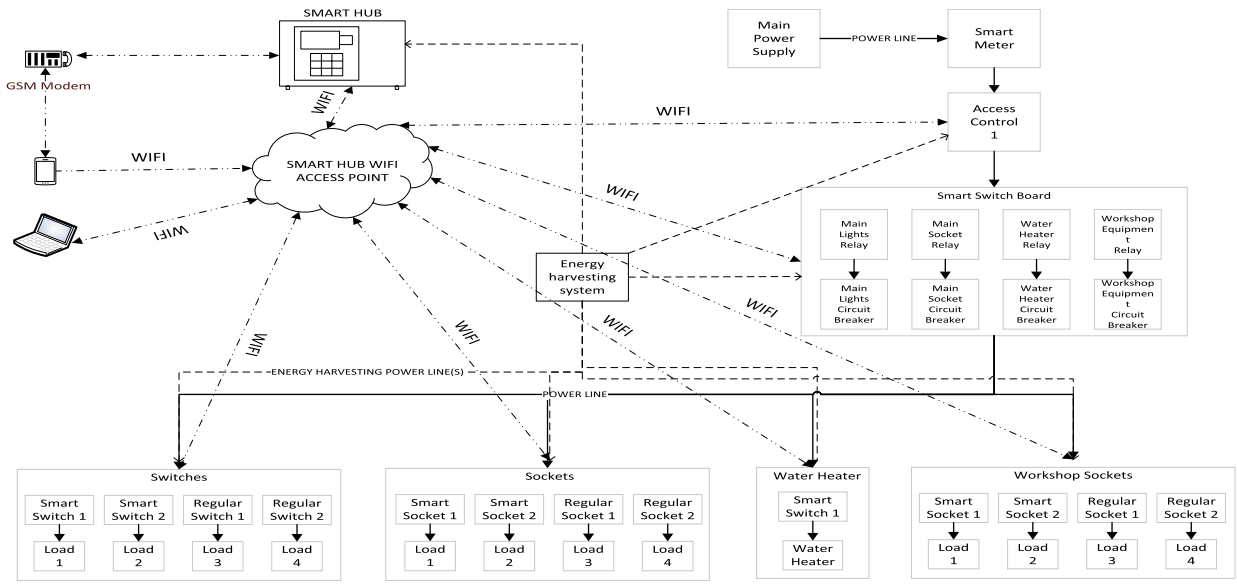

FIGURE 1. Proposed secured smart home switching system based on wireless communication and self-energy harvesting.

to smart power sockets. The system is designed such that smart sockets wirelessly provide the necessary data to a central controller., with the aim of reducing energy consumption in a smart building. Experimental results show that the proposed smart socket can correctly read the power consumption of wirelessly connected devices from up to 18m away without loss of data. The central controller can effectively control multiple sockets from a scheduled user program code. The system was implemented and tested for 24-min, which shows an improvement in home energy management system.

Concerning true home automation, the references as mentioned earlier encounter some drawbacks such as: (1) The security of the mains power supply to avoid unauthorized personnel switching on and off the home and appliances' power supply system; and (2) Each of the control units of the switches and sockets consumed the home main power supply, thereby increasing the cost of running the home automation. Hence, our work intends to solve the mentioned two major challenges by designing a secured smart home switching system using wireless communications and self-energy harvesting system for the control electronics in the smart home.

III. PROPOSED SECURED SMART HOME SWITCHING SYSTEM BASED ON WIRELESS COMMUNICATION SELF-ENERGY HARVESTING

This section gives details on the proposed secured smart home switching system. It consists of three sub-systems: (1) The photovoltaic with ultracapacitor energy buffer system for self-energy harvesting; (2) The access control system; and (3) The smart hub design system. Figure 1 shows an overview of the proposed system. Figure 1 shows the pictorial form of the proposed system. The model shown in Figure 1 is for implementation in a single home/building, and its main building blocks are a smart hub, smart socket, smart switch, smart switchboard, energy harvesting system and access control 1. Access control 1 is the first form of the buildings power supply security. It connects power from the smart meter to the rest of a building through the smart switchboard. By entering the correct pin code using an inbuilt keypad on Access control 1, only authorized users can turn on or off power into the entire building.

The proposed system has two power sources; one is the energy harvesting system, and the other is the main power line from a power grid into a building. The solid black lines represent the flow of the mains alternating current (AC) electricity from the power grid and around the building to the appliances/loads while the dashed lines depict the Direct current (DC) electricity from the energy harvesting system to the active electronic components of the circuitries and wireless communication.

At the core of the proposed system is the smart hub. The smart hub provides centralized control of the whole building's electricity, creates the internal Wi-Fi network access point for the system and also bridges the internal network to cellular networks by the use of a GSM modem. Through the smart hub, an authorized user can remotely and locally monitor and control of the power states of smart switches, smart sockets and smart switchboards in a building and hence monitor and control the state of appliances connected to a buildings power supply.

The smart switches, smart sockets, and smart switchboards are the actuators of the system. They are responsible for the physical control of AC power flow to appliances in a building, and they do so basely on the commands wirelessly communicated from the smart hub or based on a user's physical interaction with the switches present on them. By using the proposed system depicted in Figure 1, the system can be

implemented in homes and buildings to make them smart and secure. The proposed secured smart home switching system has three sub-systems, such as:

A) photovoltaic with ultracapacitor energy buffer system;
B) The access control system, and
C) smart hub design system.

A. SYSTEM POWER SUPPLY AND SELF-ENERGY HARVESTING

The power management (energy harvesting) system oversees the control of the main electricity in the house, and it is powered through a solar panel to guarantee its independence from the mains. The solar system is composed of a panel, a battery, an MPPT (Maximum Power Point Tracking) system and a flyback converter with output regulated through a PID controller. The solar panel supplies both load and the battery during the day time whereas the battery supplies the load during the night time. The battery charged through a buck converter plays the role of the MPPT and maintains the voltage level of the panel at the same level during the day time. The transfer function of the designed system corrector controls the output of the flyback. The loop gain should be very large or must contain an integrator to reduce the effect of the disturbances on the regulated output. This condition guarantees at the same time a good matching between the output and the reference signal.

For the MPPT, the assumption is that the maximum power occurs at the V_{mp} as proposed in [pp add in reference] for simplification.

1) DESIGN OF THE FLYBACK CONVERTER

The converter is designed to work in the continuous conduction mode and is supplied by a 30W solar panel of 18V and the current of 1.67A at the maximum point. Due to the number of loads required to the functioning of the overall system and the difference of supply voltage levels, the flyback has two outputs of 24V and 6V. The majority of loads need 6V which justify the regulation of this output to avoid any disturbance. The second output can be regulated through a Zener diode or a linear regulator if necessary. The different equations controlling the voltages and currents in the flyback are used to size its different parameters such as the magnetizing inductance, the duty cycle, and the capacitances. The relationship between the input V_{IN} and output voltages V_O through the duty cycle and the transformer ratio $n = N_S/N_P$ is given by

$$V_O = V_{IN}\frac{\alpha}{1-\alpha}\frac{N_S}{N_p} = V_{IN}\frac{\alpha}{1-\alpha}n \tag{1}$$

where N_P and N_S represent the number of turns in the primary and the secondary windings of the transformer.

From Eqn. (1), knowing the expected input and output voltage and fixing the transformer ratio, the duty is described by the Eqn. (2) as:

$$\alpha = \frac{1}{1 + n\frac{V_{IN}}{V_O}} \tag{2}$$

The magnetizing inductance L_m is sized to allow a specific level of current ripples and to maintain the converter in continuous conduction mode (CCM). The relationship between the inductance and the current ripple Δi_{L_m} for a switching frequency of f can be expressed as follows

$$L_m = \frac{\alpha V_{IN}}{f\,\Delta i_{L_m}} \tag{3}$$

The minimum inductance to remain in CCM for a load R is given by

$$L_{min} \geq \frac{R}{2f}\left(\frac{1-\alpha}{n}\right)^2 \tag{4}$$

In the same way, the capacitances values of each output depend on the expected voltage ripple and is given by

$$C = \frac{\alpha}{R\frac{\Delta V_S}{V_S}f} \tag{5}$$

Focusing on the regulated output of the flyback at a switching frequency of $f = 100\,kHz$ and fixing the transformer ratio n to 0.5, the corresponding duty cycle is 0.4. Injecting this duty cycle in (3) for a current ripple of $0.1A$, the inductance value is about $0.72\,mH$ which is much higher than the inductance $L_{min} = 32.24\,\mu H$ from (4) required to be in CCM depending of the different load values. To avoid any risk of malfunctioning the inductance was fixed to $L_m = 1mH$.

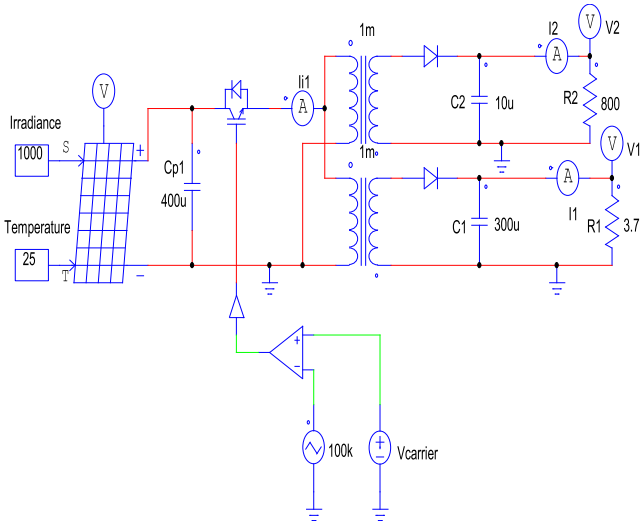

FIGURE 2. Circuit diagram of the energy harvesting system with flyback converter.

For the capacitance, with the relative voltage ripple fixed to 0.5%, equation (5) leads to 179 μF set to 300 μF per safety. The non-regulated 24 V output parameters are obtained keeping the same L_m and duty cycle as for the regulated output. The transformer ratio required for this output is then 2 and the required capacitance is $C_2 = 1\ \mu F$ set to $10\ \mu F$ for safety in the functioning of the system. The final circuit of the flyback with all its parameters is shown in Figure 2. Two different transformers are used here because of the lack of the three

winding transformer with inverted polarity in the Psim circuit simulation software [xx, add in Ref for Psim].

In this paper, an ideal model is used for all the switches to simplify the understanding of the system with the controller, the battery and the MPPT tracking.

2) CONTROLLER DESIGN FOR CONVERTER

In the controller design, regulation is applied to only one output of the flyback. The PID regulates the 6V output because it supplies more loads, whereas the Zener diode regulates the 24V output. In the design, the regulator, the transfer of the converter is required to determine its stability and its capability to reject perturbations on the system.

From a model proposed by Erickson and Maksimovic [54], the transfer function of the flyback can found from the ripple. The transfer function accounts for both the rejection of disturbances as well as for the pursuit of the reference signal. Using the superposition method, the transfer function between the output and the input $H_{VV}(s)$ and the one between the output and duty cycle $H_{Vd}(s)$ are determined and given by Eqns. (6) through (9) as;

$$H_{VV}(s) = \frac{n\frac{\alpha}{1-\alpha}}{1 + s\left(\frac{n}{1-\alpha}\right)^2 \frac{L_m}{R} + s^2\left(\frac{n}{1-\alpha}\right)^2 L_m C} \tag{6}$$

The general canonical form of the system is described by Eqn. (8) as:

$$H_{VV}(s) = H_{VV0}\frac{1}{1 + 2\varepsilon_0\frac{s}{\omega_0} + \left(\frac{s}{\omega_0}\right)^2} \tag{7}$$

where $H_{VV0} = n\frac{\alpha}{1-\alpha}$ is the system steady state gain, $\varepsilon_0 = \frac{1}{2}\frac{n}{1-\alpha}\frac{1}{R}\sqrt{\frac{L_m}{C}}$ the damping coefficient and $\omega_0 = \frac{1-\alpha}{n\sqrt{L_m C}}$ the resonance frequency of the system. In this case, the constants are $H_{VV0} = \frac{1}{3}$, $\varepsilon_0 = 0.17$ and $\omega_0 = 2191\ rad/s$.

$$H_{Vd}(s) = \frac{\frac{n}{1-\alpha}\left(V_{IN} + \frac{V_O}{n}\right) - s\left(\frac{n}{1-\alpha}\right)^2 L_m \frac{I_{L_m}}{n}}{1 + s\left(\frac{n}{1-\alpha}\right)^2 \frac{L_m}{R} + s^2\left(\frac{n}{1-\alpha}\right)^2 L_m C} \tag{8}$$

Its simplified canonical form is given by

$$H_{Vd}(s) = H_{Vd0}\frac{1 - \frac{s}{\omega_{ZR}}}{1 + 2\varepsilon_0\frac{s}{\omega_0} + \left(\frac{s}{\omega_0}\right)^2} \tag{9}$$

where $H_{Vd0} = \frac{n}{1-D}\left(V_{IN} + \frac{V_O}{n}\right)$ is a gain in steady condition and $\omega_{ZR} = \frac{(1-\alpha)\left(V_{IN} + \frac{V_0}{n}\right)}{L_m I_{L_m}}$ represents a high frequency zero of the system. For this system $H_{Vd0} = 25$ and the high frequency pulsation is $\omega_{ZR} = 11194\ rad/s$. Figure 3 shows the design of the PID controller based on the gain of the loop gain $L(s)$, representing the transfer function between the reference signal and the output for an open feedback.

$L(s)$ is composed of $H_{Vd}(s)$ and the transfer functions of the sensor $H_{SR}(s)$ and the corrector $H_{CR}(s)$. $H_{SR}(s)$ is a constant very often and $H_{CR}(s)$ is determined from the $H_{Vd}(s)$

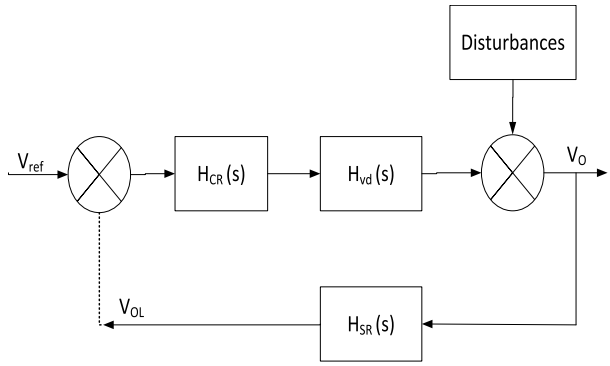

FIGURE 3. Open loop transfer function of the proposed system helping in predicting the closed loop functioning.

to guarantee a given gain and phase margin to the overall system. The general expression of the loop gain is

$$L(s) = \frac{V_{ref}}{V_{OL}} = H_{Vd}(s)\,H_{SR}(s)\,H_{CR}(s) \tag{10}$$

In closed loop, the relationship between the output and the different system inputs using superposition is

$$V_o(s) = \frac{1}{H_{SR}(s)}\frac{L(s)}{1 + L(s)}V_{ref}(s) + \frac{H_{VV}}{1 + L(s)}V_{IN}(s) \tag{11}$$

The objective of the control is to guarantee in permanent steady state conditions that the output is equal to the reference and the perturbations cancel. To satisfy these conditions, $L(s)$ should be very large meaning it should have an integrator. To determine the corrector, the bode plot of $L(s)$ without $H_{CR}(s)$ permits to find the phase and gain margins of the system.

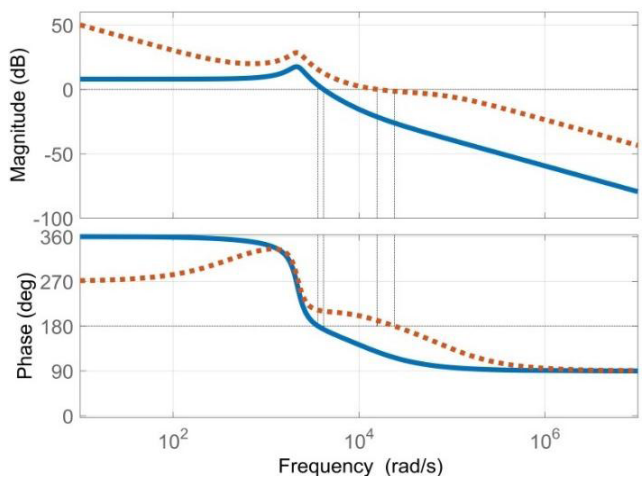

FIGURE 4. Bode plot of the system without and with the PID corrector.

As shown in Figure 4, the phase and gain margin are improved to guarantee a good matching between the output and the reference signal and the cancellations of disturbances. The PID is then designed knowing the crossover frequency ω_C, the resonance frequency ω_0 and the phase margin.

The corrector can be expressed as follows

$$H_{CR}(s) = H_{CR0}\frac{1+\frac{s}{\omega_Z}}{1+\frac{s}{\omega_P}}\left(1+\frac{\omega_L}{s}\right) \tag{12}$$

where ω_Z and ω_P represent the zero and the pole of the PD corrector followed by the PI corrector which frequency is ω_L is set low not to change the phase margin fixed by the PD corrector. In this case the frequencies ω_Z and ω_P were 4179 rad/s and 85025 rad/s respectively to have a phase margin of 12° at the frequency of 3 kHz. The PI frequency was chosen equal to be $\omega_L = \omega_C/10 = 415\ rad/s$ and the gain depends on the system parameters and the different frequencies and its value is $H_{CR0} = 3.05$. The designed PID corrector is stable and responds well to different changes during the system functioning.

3) ULTRACAPACITOR AND MPPT SYSTEM

In this section, the ultracapacitor and MPPT system is discussed. The output voltage is supposed to be constant whereas the solar panel output is subject to variations. The controller is designed to regulate the input to a fixed value which corresponds to the maximum power point of the panel as shown in [55]. The ripple model of the buck converter is required to be able to size the controller correctly. In the system, the obtained ripple model from the voltage of the inductor and the current flowing from the capacitor of $\mathbf{400\mu F}$ acts as a filter to the panel output. Figure 5 shows a simplified diagram of the Ultracapacitor charging system through MPPT.

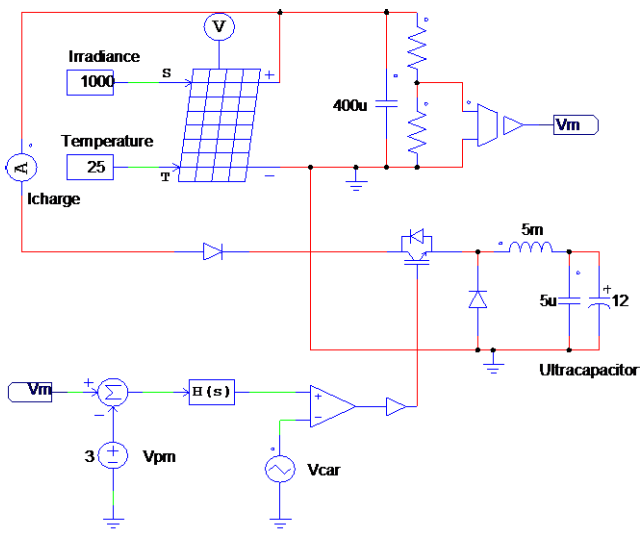

FIGURE 5. Ultracapacitor charging system through MPPT.

The series resistance of the panel, the ac model of the input capacitor current and the inductor voltage leading to the control equations, contributes to the control of the input voltage of the system. The transfer function between the input voltage and the duty cycle can be expressed by Eqn. (13).

$$H_{Vd}(s) = \frac{\frac{V}{\alpha} - s\frac{LI}{\alpha^2}}{1+s\frac{L}{\alpha^2 R_S}+s^2\frac{LC}{\alpha^2}} \tag{13}$$

where $V = 18V$ is the expected input voltage, $I = 3A$ the ultracapacitor current, α the duty cycle and $R_S = 3.53\ m\Omega$ the series resistance of the panel. In the same way, the transfer function between the input and the output is given by Eqn. (14)

$$H_{Vd}(s) = \frac{1}{1+s\frac{L}{\alpha^2 R_S}+s^2\frac{LC}{\alpha^2}} \tag{14}$$

The loop gain expressed in the same way as in Eqn. (10) with $H_{SR} = 1/6$ presents important gain, and phase margins. For this reason, a simple PI corrector was designed to guarantee the cancellation of disturbances in permanent steady conditions. The bode plot of the loop gain with and without a PI corrector is shown in Figure 6.

The expression of the PI obtained from the loop gain is given by Eqn. (15)

$$H_{CR}(s) = H_{CR0}\left(1+\frac{\omega_L}{s}\right) \tag{15}$$

where $H_{CR0} = 10396$ and $\omega_L = 238\ rad/s$.

In the design of this corrector, a PID could also be used, but because of the performance of the PI and its relative simplicity, it presents an acceptable and affordable solution.

4) OVERALL POWER SYSTEM DESIGN

The overall power system is composed of the solar panel, the MPPT block permitting to charge the ultracapacitor through a buck converter and the flyback converter with the regulation system. The solar panel voltage is maintained at 18V during the day time and changes to its open circuit voltage of 22V during the night time. Figure 7 shows the proposed design of the full system of the power supply with all the components and control circuit. The switch named "Time" models the change between the day and night times. During the day time, the panel supplies all the systems whereas the ultracapacitor supplies the load during the night time. Diodes are used to avoid any power transfer from the ultracapacitor to the solar panel and to allow current going from the ultracapacitor when the switch is open (no current from the panel). The controller and the Zener diode permit to maintain the output voltages and currents at the expected ranges imposed by the loads. The main loads require about 6V each, and the three resistors represent them. Through the Zener diode, the Wi-Fi module connected to the second output of 24V has been regulated. The ultracapacitor has been designed to be able to supply the system for more than half a day which represents the time interval between sunset and sunrise.

B. ACCESS CONTROL SYSTEM

The access control system is the Access Control 1 as shown in Figure 1. The access control system provides an electrical switching system for a home, having a master electricity input connected to a distribution unit which splits the master electricity input into a plurality of electricity lines. The proposed electrical access control switching system includes an access control subsystem. The access control subsystem

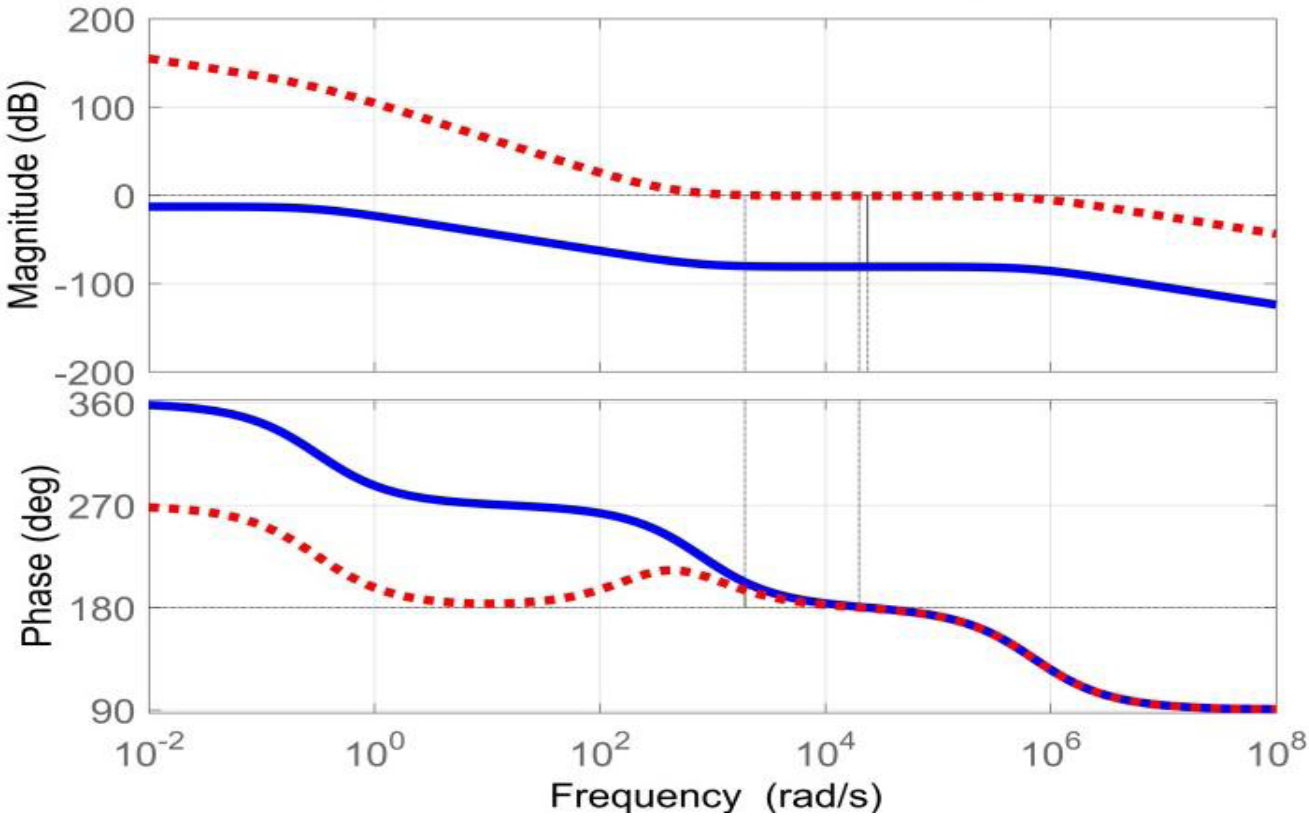

FIGURE 6. Comparison of the loop gain of the system with (dashed line) and without (continuous line) the PI corrector. The PI guarantees the cancellations of disturbances.

comprises of a user input arrangement to receive a coded input from a user, and a master controller to compare the received coded input against at least one correct code. Also, each slave control subsystem contains a slave switch configured to connect or disconnect the split electricity line from the distribution unit; a sensor operable to receive an external signal; and a slave controller operable to open or close the slave switch in response to the received external signal. The electrical access control switching system thus provides control of the whole building employing the master control subsystem and providing fine control of a plurality of the electricity lines of the building employing the slave control subsystems.

The term "distribution unit" includes electrical wiring or splitter where at least one electrical input splits into two or more electrical outputs. This work investigates a distribution board or switchboard which is common in most buildings and which in many regions is required by law.

The user input arrangement is a keypad. The coded input is a PIN code or password. This work envisages that only a few authorized users, e.g., administrators, are provided with the correct code.

The plurality of slave control subsystems includes many different sensor types. One slave control subsystem includes a sensor type which is different from that of a different slave control subsystem. One of the slave control subsystems includes an infrared sensor. Another sensor in the access control switching system is an acoustic sensor (e.g., a microphone) responsive to sound, by speaking or sound generated by movement. Each slave control subsystem may control a load or appliance which is powered by the split electricity line. The slave control subsystems are independent of each other and are dependent on the access control subsystem.

The proposed secured automation switching system consists of three components: (1) Keypad (password) enabled switching system; (2) Remote (infra-red) enabled switching system; and (3) Sound enabled switching system.

The password enabled switching system (access control unit) is the first stage of the switching system and has four sub-stages. The first of the sub-stages utilizes eight set of codes, which must be entered correctly to enable the switching. Instead of the normal ON/OFF system used in the traditional switching system, this system uses eight combinations of codes which must be entered in the right order, else, the system will either be ON or OFF depending on the state it was before the codes' selection. The design used CD4044 (quad NAND R/S Latch). The 4044 is a quad cross-coupled 3-state R/S latch with a common output enable. Each of the latches has a separate 'Q' output and individual SET (S) and RESET (R) inputs.

The common enable input controls the "Q" outputs. A logic "1" or high on the enable input connects the latch

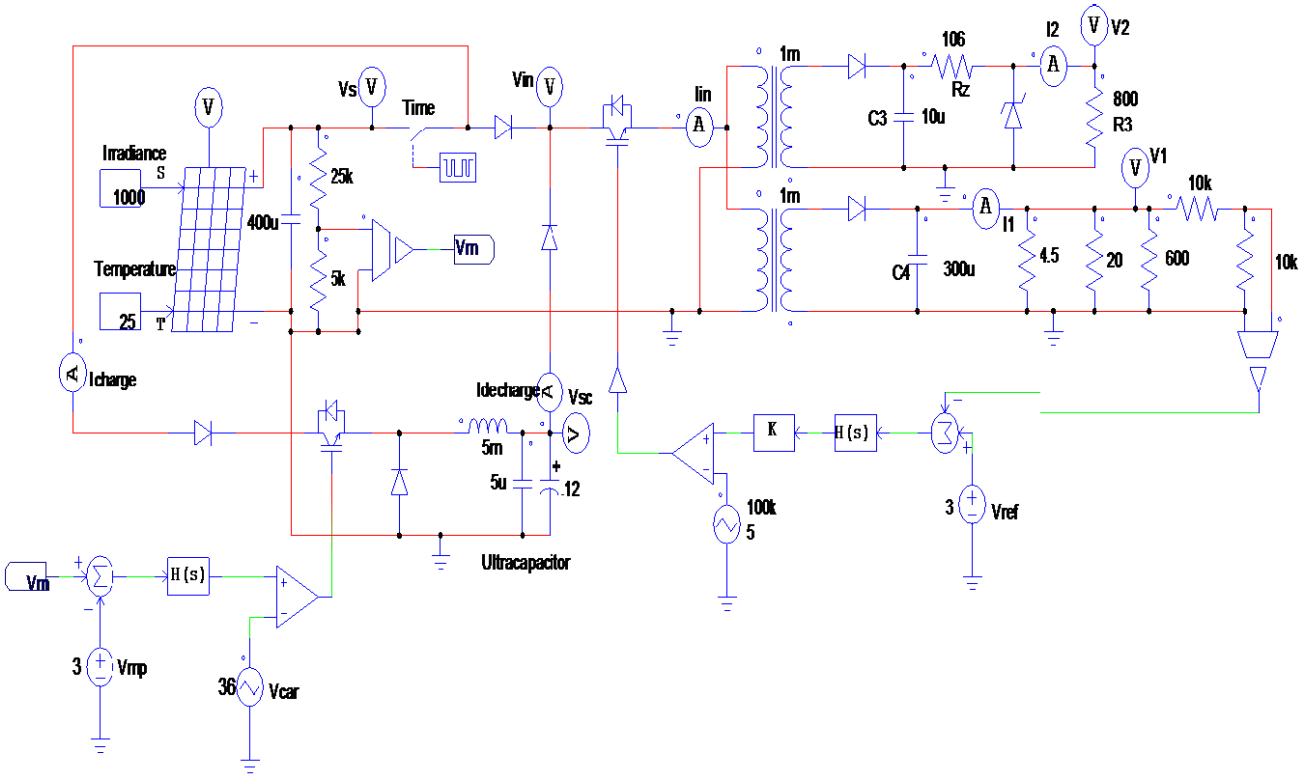

FIGURE 7. A full system of the power supply with all the components and control circuit.

states to the "Q" outputs. In order words, a low on the enable input disconnects the latch states from the Q-outputs, resulting in an open circuit feature.

Two sets of CD4044 were used to make up the 8-combination of keys allowing a set of permutations. In this work, we make use of twelve switches as keys in the keypad. By using the twelve switches, the number of possible combinations can be obtained using Eqn. (16) as:

$$P = {}^{12}C_8 = \frac{12!}{4!8!} = 495 \tag{16}$$

Eqn. 16 implies that 495 ways are possible for which this combination is possible, which means that the probability of unauthorized personnel to switch ON or OFF the power mains is 1 out of 495 ways. The figure shown in Figure 7 is the control unit consisting of the second set of latches with the switches serving as our sets of codes.

The second sub-stage is the voltage comparator which uses LM393 to compare the final output of the second CD4044 latch with a fixed voltage at the Pin 2 of the LM393. In this, if the output of the Pin 1 of 4044 IC is high, which serves as the input to the Pin 3 of the LM393, the output of the comparator (LM393) is set high, hence, clocking the third sub-stage that utilizes 7474 (dual positive-edge-triggered D flip-flop). Once clocked, the output of the flip-flop remains in that state until it sees another signal. The output of the flip-flop (Pin 5, 1Q) helps in setting V_{BE} of the switching transistor (BC107BP) high (approx. 0.67V), hence, forcing the voltage at the collector low, which in turn allows the coil of the relay to become magnetized, and switching from normally open to close. With this action, the circuit is complete, and the household or industry power is switched ON, or OFF depending on the state, it was in before the correct combinations of codes. Figure 8 shows the complete circuit of the proposed access control system.

C. SMART HUB SYSTEM DESIGN

This section describes the design process of the wireless sensor network (WSN) based smart home system. The proposed system has a node called "smart home hub (smart hub)" to function as the core sink node of the WSN based smart home, and three other nodes called "smart socket, smart sensor and smart switch," which functions as the endpoints of the system. Through the smart hub, a user can interact with appliances connected to the smart sockets and switches. However, any changes made to the state of the smart sockets and switches are sent and reflected in the smart hub. Figure 9 shows the block diagram of the proposed WSN based smart home.

The overview of the functions that are carried out by the WSN based smart home system can be divided into three components: (1) Design of the smart home hub; (2) Design of the smart home switch; and (3) Design of the smart home socket. Figure 10 shows the circuit diagram of the smart home and its three components.

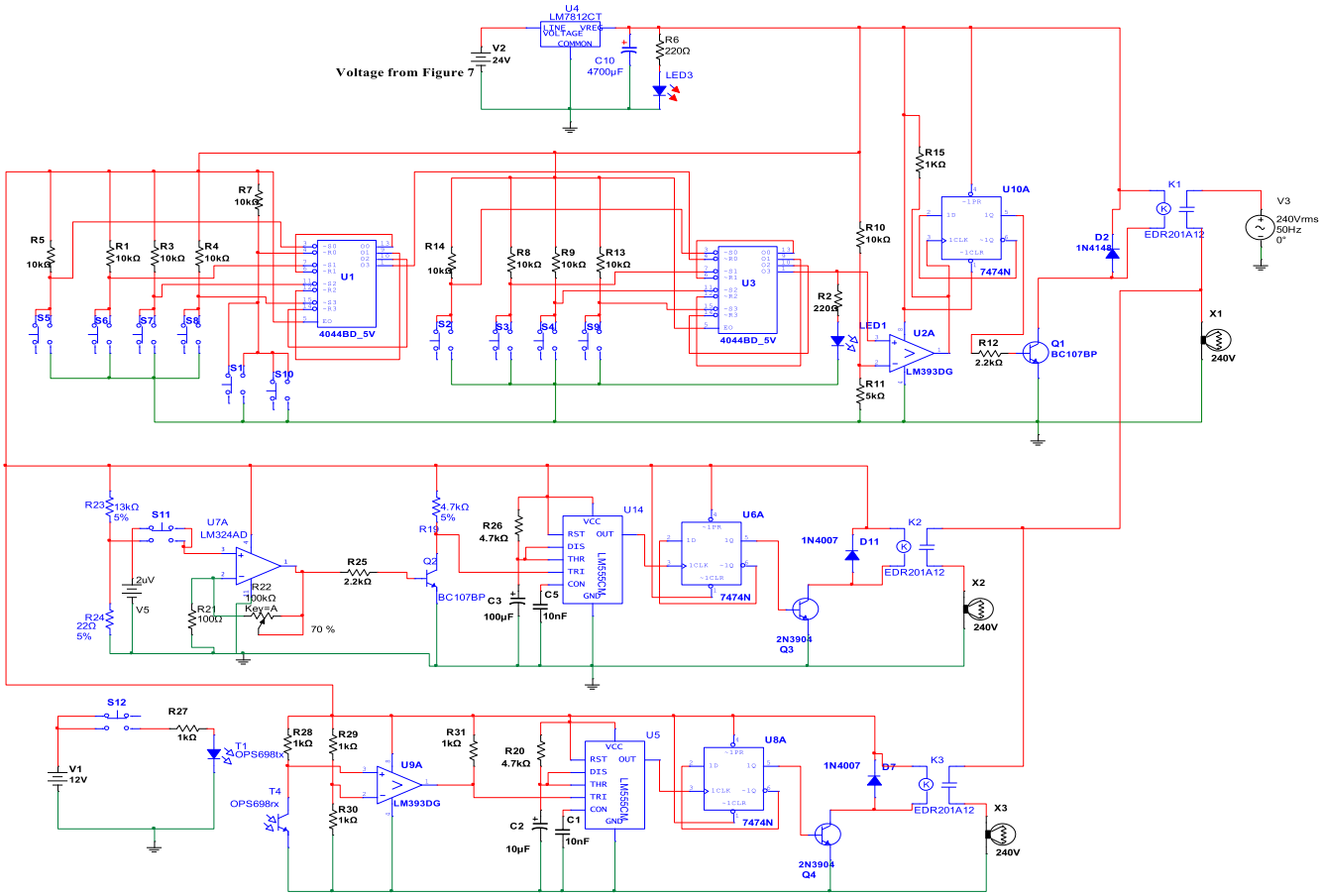

FIGURE 8. Complete circuit of proposed access control system.

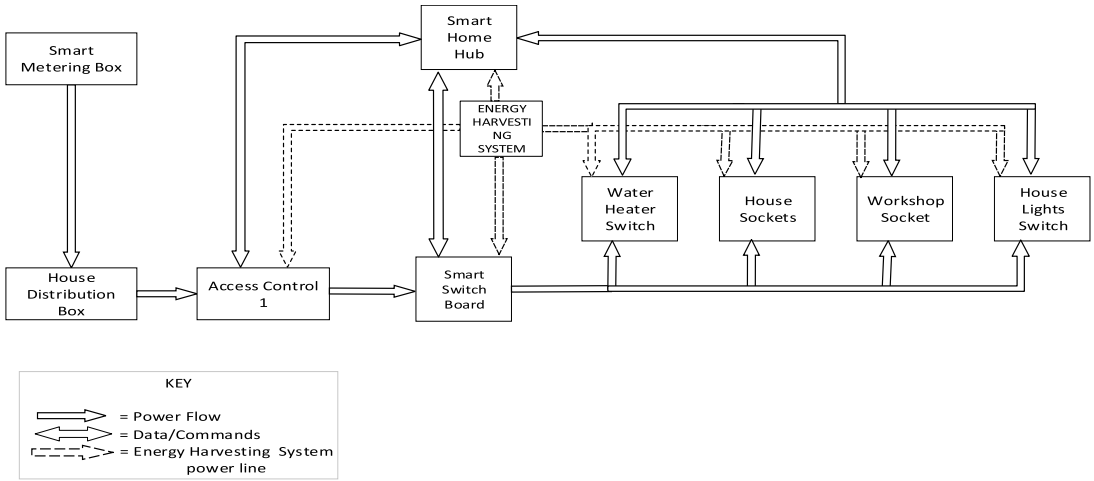

FIGURE 9. Proposed WSN based smart home block diagram.

1) DESIGN OF SMART HOME HUB (CONTROL CENTER POINT)

The role of the Smart Home hub is to act as an interface between the home user, smart sensors, smart switches, and the smart socket. It is responsible for processing the data it receives and transmitting responses to the end nodes or displaying the relevant information based on user request.

The objectives of the smart home hub are:

a) To connect a house's main distribution box and control (switch on/off) by use of relays the main house electrical routes (house lights, house sockets);

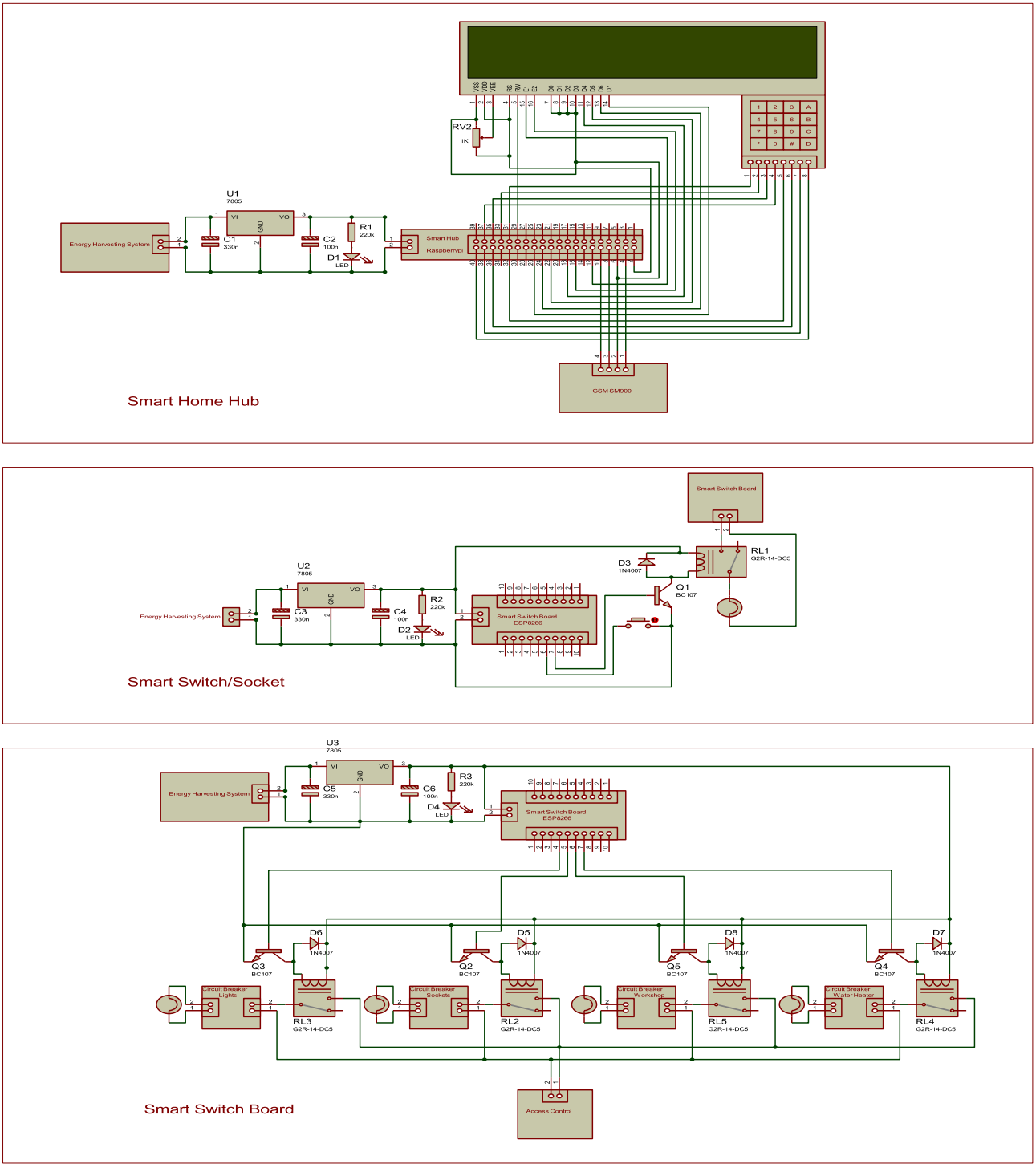

FIGURE 10. **Smart home hub circuit diagram.**

b) Have two methods of user input. That is via internal keypad or wirelessly through SMS;
c) Have two methods of relaying information to a user. That is via the internal display monitor or wirelessly through SMS;
d) Capable of locking and unlocking the ability to switch the power state of the main house relay switches with a key code;
e) Wirelessly collect data from smart sensors;
f) Wirelessly collect data and control (switch on/off) the smart switches and smart sockets;
g) Wirelessly lock and unlock the ability to switch the power state of the smart switches and smart sockets.

Figure 11 shows the process of data exchange between smart components of the system.

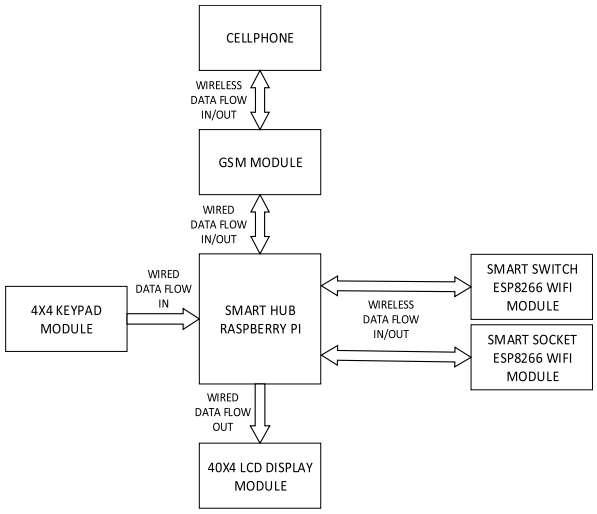

FIGURE 11. **Data flow between smart components.**

For realization of the WSN based Smart Home System, the smart hub houses a Raspberry Pi microprocessor and a USB dongle modem of which are connected to set-up a communication link for transferring data around the system. The GSM micro-controller sets up a link between the Smart Hub and a user's cell phone. The Raspberry Pi acts as both the Smart Hubs control center, and Wi-Fi between the Smart Hub and the Smart Sockets or Smart Switches.

As the center point of the smart hub, the Raspberry Pi is responsible for:

a) Reading and processing of user input into the system.
b) Receiving instructions from the user's cell phone and Transmitting data to the user's cell phone through the GSM module.
c) Display information on the two 20X2 character LCD screens.
d) Receiving and transmitting data and instructions, to and from the smart home smart Socket or Switch.

The Smart home hub is described by the procedures (Procedure 1 to 4) and Pseudo Codes (Pseudo Code 1 to 4) which show the flow of information and operation of the smart hub. The procedures and pseudo codes are used in the software implementation of the smart home hub of which is written in python language.

Procedure 1: System-Locked

Description: When the system is locked, a pin code request is displayed on the Smart Hub LCD screens. A user must enter the correct pin code using the inbuilt keypad to be granted access into the system. Entering of a wrong pin code by a user leads to an error message to be displayed on the smart hub LCD screen. The smart hub LCD screen then displays a new pin code request for a user to retry. A correctly entered pin code leads to the display of access granted message to indicate successful unlocking of the smart hub. After the display of a successful unlock message, the smart hub proceeds to the system-unlocked function.

Pseudo Code 1:

```
START
Create network Wi-Fi access point.
Establish MQTT access point connection
Establish GSM connection
Display Locked-Screen
      "Pin code Request."
      "Sockets or Switch list."
WHILE forever
   Scan for GSM-Data
   IF GSM-Data available
      THEN
      CALL GSM-CALL
   ENDIF
   Scan for MQTT-Data
   IF MQTT-Data available
      THEN
      CALL MQTT-CALL
   ENDIF
   Scan Keypad
   IF Keypad input available
      THEN
      IF Keypad input = "any number 0-9"
        THEN
         Display Keypad input
         Stored key = Pressed key
         Increment Key-Count
        IF key-count == 4
         THEN
          Reset Key-Count to 0
          IF Entered-Pin == Stored-Pin
            THEN
            Reset Key-Count to 0
            Call System-Unlocked
            ELSE
              Display error message
              Display Locked-Screen
            ENDIF
      ENDIF
   ELSE
   IF Keypad input == 'C'
      THEN
      Clear Display
      Reset Key-Count to 0
      Display Locked-Screen
   ENDIF
   ELSE
   IF Keypad input == 'D'
      THEN
      Toggle Locked-Screen Device-Type-List
   ENDIF
   ELSE
   IF Keypad input == '#'
      THEN
      Toggle Locked-Screen Device-Number
     ENDIF
```

```
ENDIF
ENDWHILE
```

Procedure 2: System-Unlocked

Description: When the system is unlocked, a user is granted permission to look at the status of the available smart sockets and smart switches. Whenever there is any change caused by the manual switching off/on of an unlocked smart socket/switch in the network, the system refreshes the LCD screen and reflects the real-life state of the smart sockets/switches. If there is an SMS sent by a user to the smart hub, the system processes the message and sends commands to the affected smart sockets/switches and then updates the LCD only if the SMS command is valid. Apart from looking at the states of the smart home switches/sockets, a user can also modify their states. This is accomplished by selecting an available smart switch or smart socket by entering the number associated with the device. Having selected the device, the Target-Device-Edit function is called, and the user can then modify the power state or lock state of the selected device. If the user is satisfied with the changes made and does not desire to make further changes, they can press on the keypad and go back to the system locked state.

Pseudo Code 2:

```
START
Display Unlocked-Screen
      "List of devices."
      "List of available commands."
  WHILE forever
    Scan for GSM-Data
    IF GSM-Data available
      THEN
      CALL GSM-CALL
    ENDIF
    Scan for MQTT-Data
    IF MQTT-Data available
     THEN
     CALL MQTT-CALL
  ENDIF
  Scan Keypad
  IF Keypad input available
     THEN
     IF Keypad input = "any number 0-9"
       THEN
       IF key-count =< 2
         THEN
         Display Keypad input
         Store Keypad input in Target-Devices number
     ELSE
     IF Keypad input = 'A'
        THEN
        IF Target-Device number available
           THEN
           CALL Target-Device-EDIT
           Clear Target-Device number
        ENDIF
     ELSE
     IF Keypad input = 'B'
       THEN
       Clear Display
       RETURN
     ENDIF
     ELSE
     IF Keypad input = 'C'
       THEN
       Clear Target-Device Number
     ENDIF
     ELSE
     IF Keypad input = 'D'
       THEN
       Toggle Unlocked-Screen Device-Type-List
     ENDIF
     ELSE
     IF Keypad input = '#'
       THEN
       Toggle Unlocked-Screen Device-Number-List
     ENDIF
  ENDIF
ENDWHILE
```

Procedure 3: Target-Device-Edit

Description: This is the function called upon by the System-Unlocked function when a user wants to change a Smart home socket or Smart home switch device (Smart-Devices) Power-State or Lock-State. The function performs this by displaying a blinking cursor over the state (power-state or lock-state) that is being modified. Interacting with the keypad, allows a user to toggle a blinking cursor between the two states (power-state or lock-state), toggle the value of the states (on/off or unlocked/locked) and return to the System-Unlocked function.

Pseudo Code 3:

```
START
Display blinking cursor on Target-Device power state
WHILE forever
  Scan for GSM-Data
  IF GSM-Data available
  THEN
     CALL GSM-CALL
  ENDIF
  Scan for MQTT-Data
  IF MQTT-Data available
     THEN
     CALL MQTT-CALL
  ENDIF
  Scan Keypad
  IF Keypad input available
     THEN
     IF Keypad input = 'A'
        THEN
        IF blinking cursor on Target-Device power state
           THEN
           Toggle Target-Device power state
        ELSE
```

```
            Toggle Target-Device lock state
         ENDIF
         Update Device-Database
      ELSE
      IF Keypad input = 'B'
         THEN
         Stop blinking cursor
         RETURN
      ENDIF
      ELSE
      IF Keypad input = '#'
         THEN
         IF blinking cursor on Target-Device power state
            THEN
            Blink cursor on Target-Device lock state
         ELSE
            Blink cursor on Target-Device power state
         ENDIF
      ENDIF
   ENDIF
ENDWHILE
```

Function 4: MQTT-Call

Description: The MQTT-Call is a function that is needed whenever the Smart-Hub receives an MQTT data packet. The function extracts information from the data packet and executes the instructions contained in the packet before returning to the function that called it.

Pseudo Code 4:

```
START
Process Received MQTT data-packet
      "Device-ID."
      "Commands."
IF data-packet is a command
   THEN
   Send MQTT data packet to Target-Devices
ENDIF
Update Device-Database
RETURN
```

Function 5: GSM-Call

Description: The GSM-Call is a function that is called whenever the GSM module receives an SMS data packet. The function extracts information from the SMS and executes the instructions contained in the packet before returning to the function that called it.

Pseudo Code 5:

```
START
Process Received text message
      "Cell-Phone-Number."
      "Commands."
      "Target-Device-ID."
   IF text message command is an information request
   THEN
   Search Device-Database for Target-Device-ID
   Extract Target-Device information
Send GSM SMS response to Cell-Phone-Number
ELSE
IF text message command is an action request
   THEN
   Send MQTT data packet to Target-Devices
   Update Device-Database
   Send SMS success response to Cell-Phone-Number
ELSE
   Send SMS error response to Cell-Phone-Number
ENDIF
RETURN
```

2) SMART HOME SWITCH

The smart home switch acts as a remote switch that can be turned on or off either by commands wirelessly sent from the smart hub or physically by a user.

The objectives of the smart home switch are:

a) To switch the circuit, it controls on or off based on commands from the smart hub or the action of a user manually pressing on the inbuilt switch to change between the two power states (ON/OFF);
b) Send the state of the switch (ON/OFF) to the smart home hub;
c) Lock the state of the switch (on/off) so that it cannot be manually turned ON/OFF when commanded by the smart hub.

3) SMART HOME SOCKET

The smart home socket acts as a remote socket that can be turned on or off either by commands wirelessly sent from the smart hub or physically by a user. The objectives of the smart socket are:

a) To switch the circuit, it controls on or off based on commands from the smart hub or the action of a user manually pressing on the inbuilt switch to change between the two power states (On/Off);
b Send the state of its switch (on/off) to the smart hub;
c Lock the state of its switch (on/off) so that it cannot be manually turned on/off if commanded by the smart hub.

Figure 12 shows the process of data exchange between the components of the smart home socket/switch.

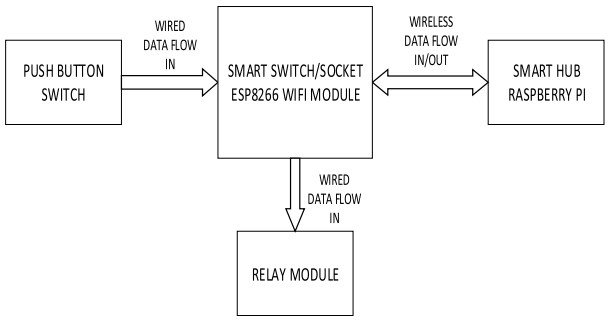

FIGURE 12. Data flow between smart node components.

The smart home socket/switch have a wireless connection with the smart hub through the built-in Wi-Fi module of the esp8266. The smart hub is also connected to an external

switch through which a user can use to turn the socket/switch on/off if it not locked. The function and description of the smart home socket/switch are described in Function 6. As the center point of the smart home socket or smart home switch, the ESP8266 is responsible for:

1) Detecting the switch presses made by a user when trying to change the power state of switch/socket.
2) Transmitting successful power state changes made by a user to smart hub.
3) Receiving instructions from the smart hub about power state changes (On/Off) or lock state changes (Locked switch/Unlocked switch)

Function 6: Smart home Socket/Switch-Main-Loop

Description: This is a function that is used by the smart home sockets or switches when they receive an MQTT data packet command from the smart hub or when a user has pressed the local switch on the socket or switch. When a command is received, it is processed to check whether it affects its power state or the lock state of the device. If the command is to change the lock state, it then deactivates any commands from the local switch until the switch is unlocked. If the command is to change the power state, it toggles the current power state of the switch or socket. Apart from a command from the smart hub, if it receives a command from the local switch, it is first checked whether the switch is locked or not. If the switch is locked, the pulses from the switch are ignored, but if it is not locked, it toggles the power state of the switch or socket and then updates the Smart Home Hub of the change in the state.

Pseudo Code 6:

```
START
Connect to Smart-Hub Wifi network
Establish MQTT connection with Smart-Hub
WHILE forever
  Scan for MQTT commands
  IF MQTT-Data available
    THEN
    Power-State = MQTT-Data * Lock state
    Lock-State = MQTT-Data * Lock state
  ENDIF
  Scan Push-Button
  IF Push-Button pressed
    THEN
    IF Lock-State = 1
      THEN
      Toggle power state
      Send MQTT data packet to Update Smart-Hub
    ENDIF
  ENDIF
ENDWHILE
```

IV. HARDWARE VERIFICATION AND PROTOTYPE TESTING

This section discusses the smart home prototype which was developed at Botswana International University of Science & Technology (BIUST) which we have termed the BIUST Smart Home Prototype. Figure 13 shows the hardware realization of the BIUST prototype. In Figure 14, we show the hardware implementation of the smart home hub prototype. The electrical connections between the raspberry pi to the keypad and LCD screens are made, with female sockets at the raspberry pi and male pins at the breadboard side. The USB dongle modem is connected directly to the Raspberry Pi USB port. User input interactions with the smart home hub are done through keypad and output from

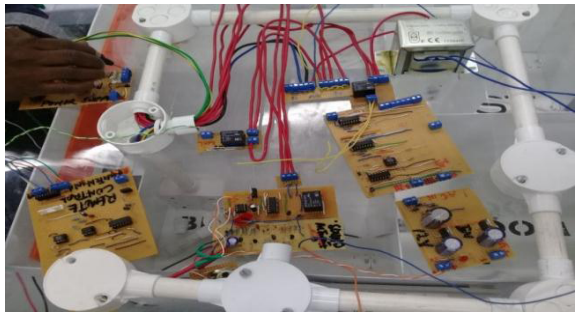

(a)

(b)

FIGURE 13. (a) Circuit prototype (b) A complete system prototype of the designed access control system.

FIGURE 14. Circuit prototype for smart hub system.

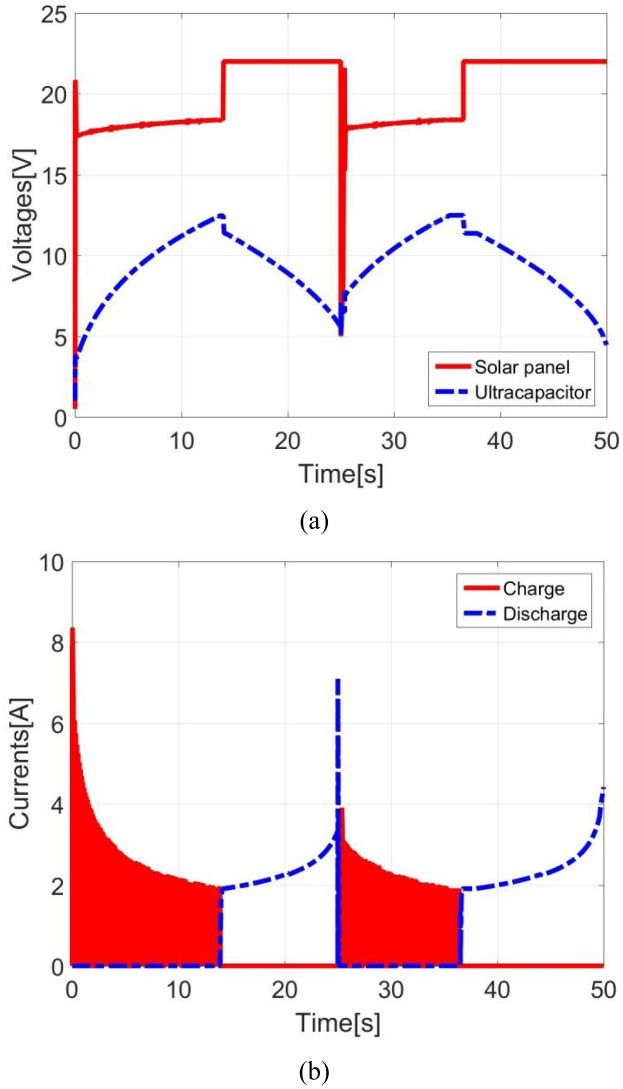

FIGURE 15. Evolution of solar panel and the ultracapacitor voltages, (b) Charging and discharging currents of the ultracapacitor.

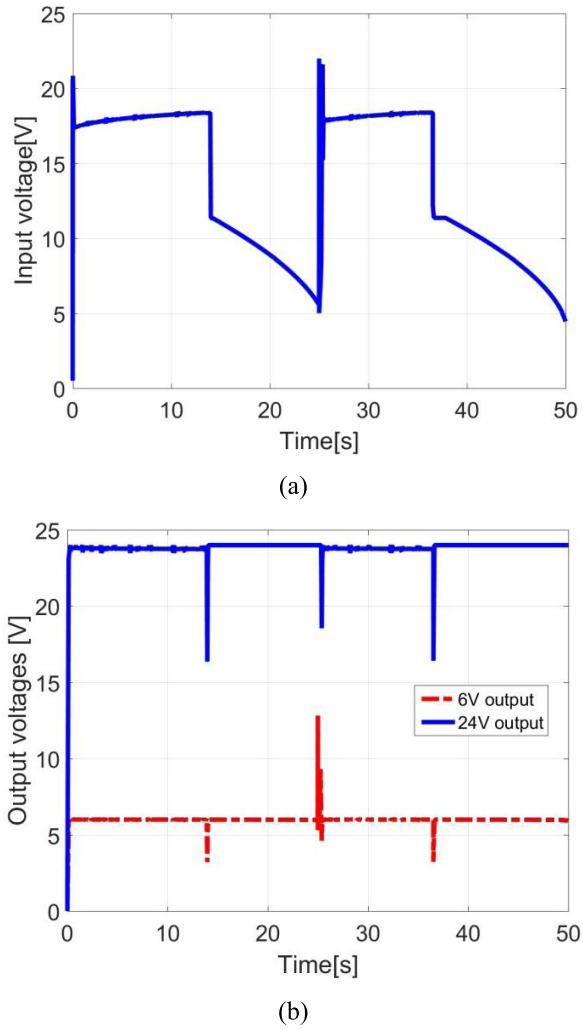

FIGURE 16. (a) The input voltage of the transformer changing with the time and (b) the output voltages for the loads with the PID regulator and the Zener diode.

the smart home hub are through the character LCD screens. As seen in Figure 14, the smart home hub is unlocked and it is displaying the power and lock states of available smart home switches. From this state, an authorized user can remotely change the power or lock states of the smart home switches. If another user were to press the switch on an unlocked switch, the change of power state would be reflected on the information displayed on the LCD screen. However, if a user presses on a locked smart home switch, the input from the user will be ignored, and the power state of the switch will not change nor will the information displayed on the LCD screens.

V. RESULTS AND DISCUSSION

This section gives some experimental results and discussions for the proposed smart home approach. The results of the system are presented and discussed in two parts: (1) System power supply; and (2) Access control system.

A. SYSTEM POWER SUPPLY RESULTS

The system power supply results are shown during two days of operation, corresponding to cycles of charging and discharging of the ultracapacitor to know if the system can supply all the loads continuously. The night time is simulated by turning off the switch "Time "which opens the line from the solar panel to the loads and set the panel to its open circuit voltage. The ultracapacitor has a rating of 12V when fully charged, and its charge remains higher than 5V during the night–time.

The simulation results confirmed that the ultracapacitor is charged at the same time as the solar panel supplies the loads. The ultracapacitor replaces the panel during the night as shown in Figure 15(a). The charging and discharging of the ultracapacitor are confirmed by the pulsed currents from the buck converter and the continuous current transferred to load as shown in Figure 15(b).

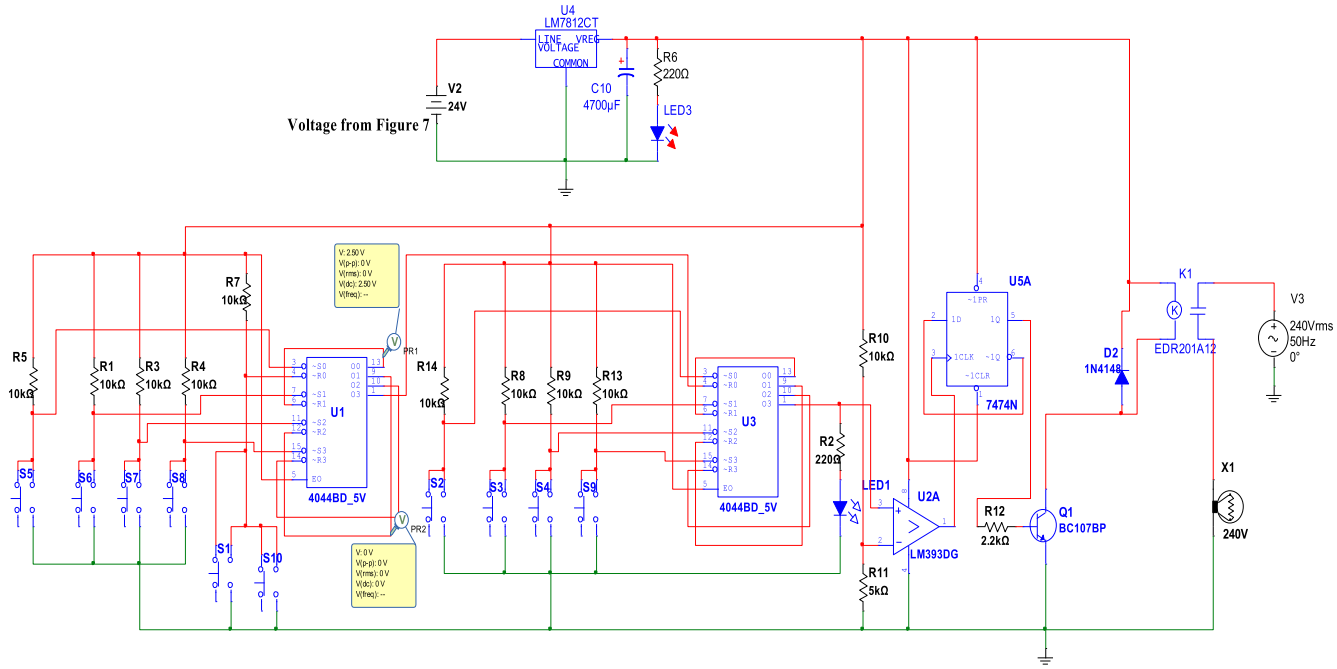

FIGURE 17. Control unit showing no key pressed.

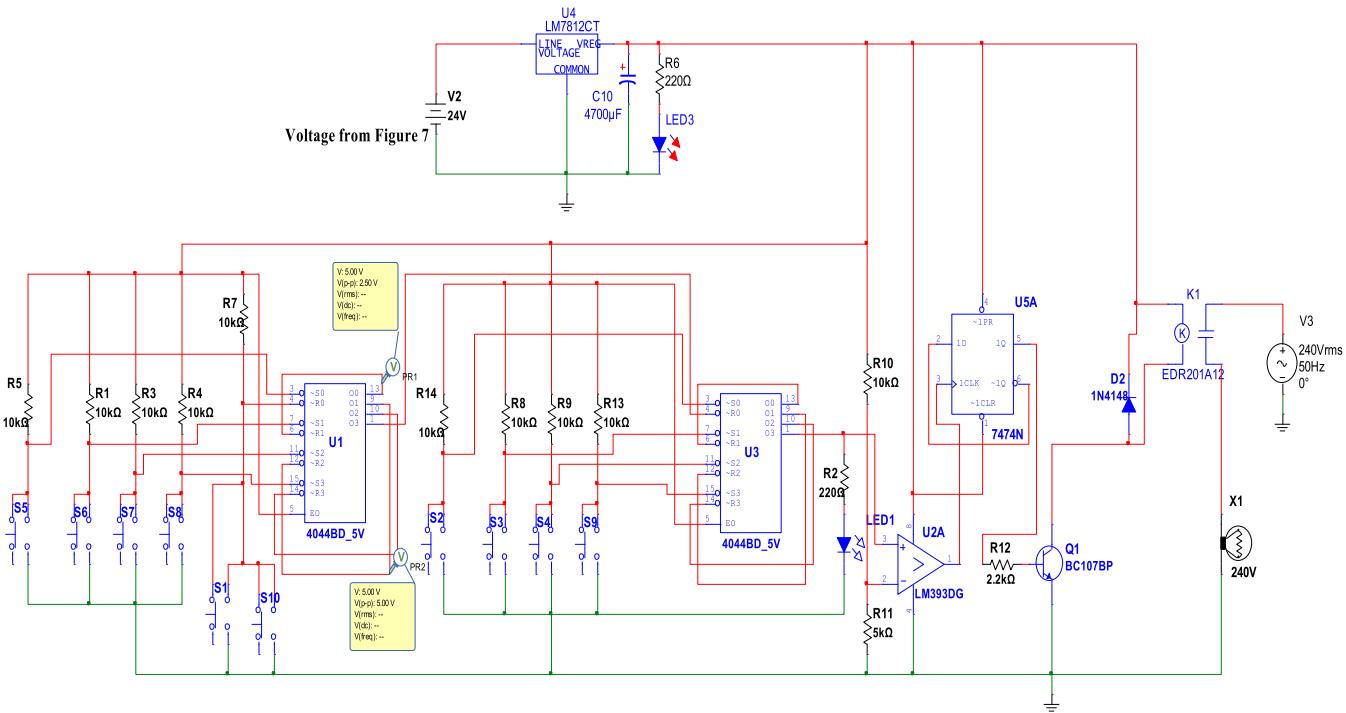

FIGURE 18. Control Unit showing when a correct key pressed.

During the day, the panel voltage is $18V$ and the ultracapacitor is charged whereas at night the panel is open and the ultracapacitor discharges through the loads. At sunset, the ultracapacitor can supply the loads and the controller shows its capabilities to compensate the change to the input in a short time with the two outputs of 6V and 24V.

Despite the change in the input voltage of the flyback given in Figure 16(a), the controller guarantees fixed outputs for the

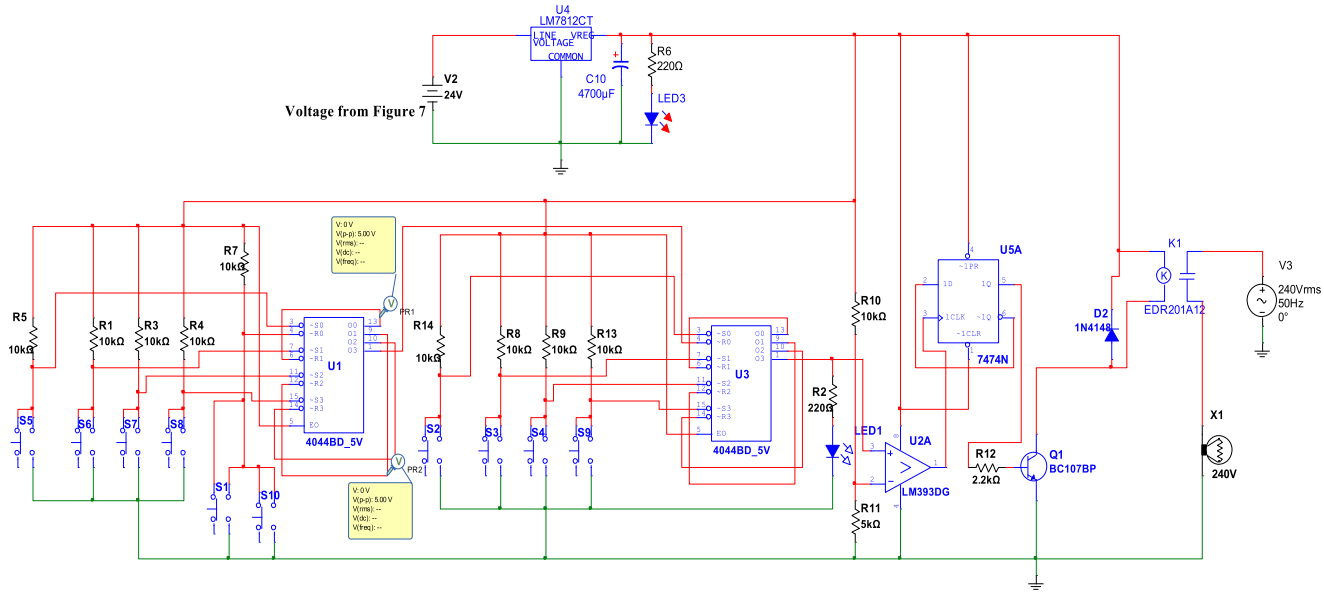

FIGURE 19. Control Unit showing when a wrong key is pressed.

loads as shown in Figure 16(b). The system reacts quickly to the changes caused by the voltage drops or the loads. Since the switches have been considered ideal, the efficiency is close to unity, and the only losses present are due to the controller voltage dividers and the low leakage of the ultracapacitor.

B. SYSTEM ACCESS CONTROL 1 RESULTS

In the system access control, the operations of the access control via the security pad are outlined as cases 1 through 4 (Case 1: No key pressed; Case 2: Correct pressing of a switch; Case 3: a Wrongly pressed switch; Case 4: Correct pressing of all switches). Figure 17 to 20 shows a summary of all four cases.

Case 1: Figure 17 shows the results when no key pressed. The 4044 IC is an active low device; this means that both the set and reset latch are only activated when they receive little or no input voltage. By taking advantage of this property, both the set and reset latch are set to receive high input voltages to keep them inactive. Since the set latch "S0" is not active, the output "00" becomes 0V. Output "00" activates reset latch "R1", and this sets output "O1" to 0V too. This pattern continues until the last reset latch and ensures that there is no output voltage when switches are not pressed correctly.

Case 2: Figure 18 shows correctly pressing of a switch.

As seen from the Figure 18, the instant switch 5 is activated, the entire 12V from the supply is dropped across Resistor 5, and this causes a low input signal at the set latch "S0". Since the device is active low, "S0" is activated and an output of 5V is released from output "00". The output from "O0" then goes to reset latch "R1" and then deactivates it. The action ensures that when the next correct switch "S6" is pressed the set latch "S1" is ready to receive the signal and give out a 5V output. So long as the correct switches are activated in the right order, the pattern goes on until the last output is 5V.

Case 3: Figure 19 shows wrongly pressed a switch.

If any of the wrong/reset switches is activated, the reset latch "R0" is activated and this resets output "00" to 0V. The action then leads to the reset of latch "R1" of which resets output "01" to 0V. This pattern goes on until all the reset latches have been activated and all the outputs are set to 0V. The operation ensures that only the correct switches can turn ON the device and ensures that the wrong switches reset any wrong attempts.

Case 4: Figure 20 shows correctly pressing of all switches.

Once all the correct switches are pressed, the last output of the second 4044 IC set to 5V. The output then activates the operational amplifier of which then sends a clock signal to the D flip-flop. Having been activated, the D flip-flop gives out a continuous 5V until it is clocked again — the output of the flip-flop biases the NPN transistor of which then allows current to flow and to switch the relay ON.

The second stage of the secure automated switching system is the remote (infra-red) enabled switching system. The complete circuit is shown in Figure 21 and 22. In this system, we have two cases: (1) when the micro-switch one is pressed which generate a signal of a frequency of about 38 KHz; and (2) when the switch 1 is open (no switch is pressed).

The circuit of when the switch one is not pressed is shown in Figure 21, and when the switch is pressed is shown in Figure 22.

Other subsystems of the access control system are the infrared switching system and sound operated switching system as shown in Figure 21 to 23.

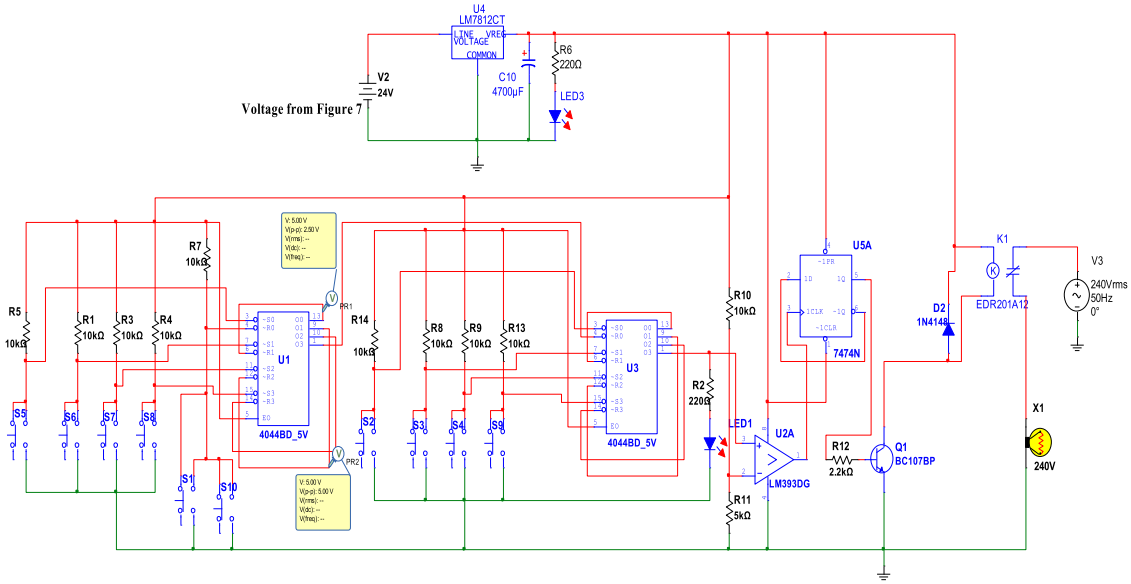

FIGURE 20. A Control Unit showing when all correct keys are pressed.

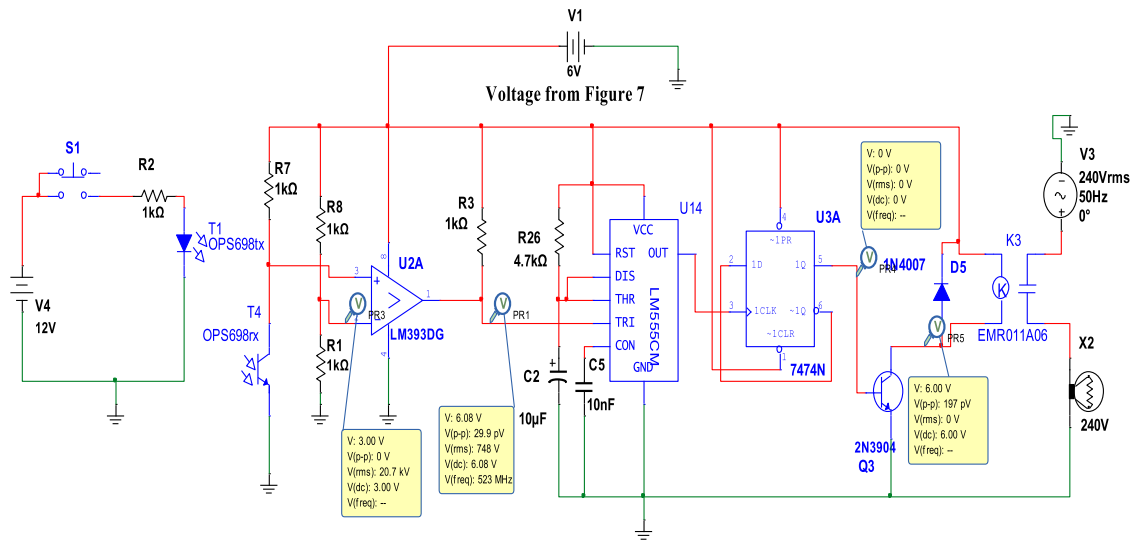

FIGURE 21. Infra-red enabled switching system showing when switch 1 is open (key not pressed).

As shown in Figure 21, When switch one (1) is opened (that is not pressed), T4 is an open circuit, and the supply voltage is across it (approx. 12V). In that case, the voltage seen at the non-inverting pin of the comparator (pin 3) is higher than the voltage at the inverting input, which then drives the comparator output high also using a pull-up resistor R3 (approx. 12V). The voltage seen at the trigger pin (pin 2) of the timer is high (more than one-third of the V_{CC}), and the output of the timer (pin 3) is low. With ths, the clocking pin of the D flip-flop receives no signal so that the V_{BE} of the switching transistor (2N3904) not to be enough to drive the transistor ON, leading the switch to remain in the open state.

The second case: when the micro-switch number one (1) is pressed, the voltage seen at the pin 3 of the comparator is low since, enough voltage is seen at the base of the transistor, as such, the collector goes low (approx. 17.9mV), and almost all the voltage is drop across R7. In that case, voltage seen at the trigger pin (pin 2) of the 555 timer is low (approx. 17.6mV), which is less than one-third of the supply voltage (12V), which then allow the timer to operate in the monostable stage, of which the time to go low depends on the timing circuit of R26 and C2. During the process, the output of the timer is high, leading to having signal to clock the 7474 flip-flop. With this, it then make it possible to biases the base of the transistor and forcing the collector of the transistor to goes

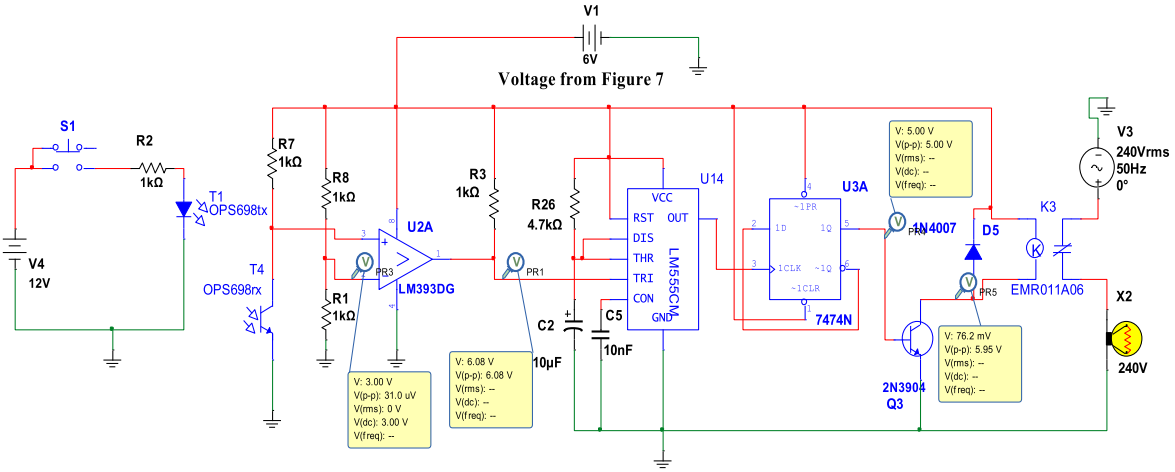

FIGURE 22. An Infra-red enabled switching system showing when switch one (1) is closed (key pressed).

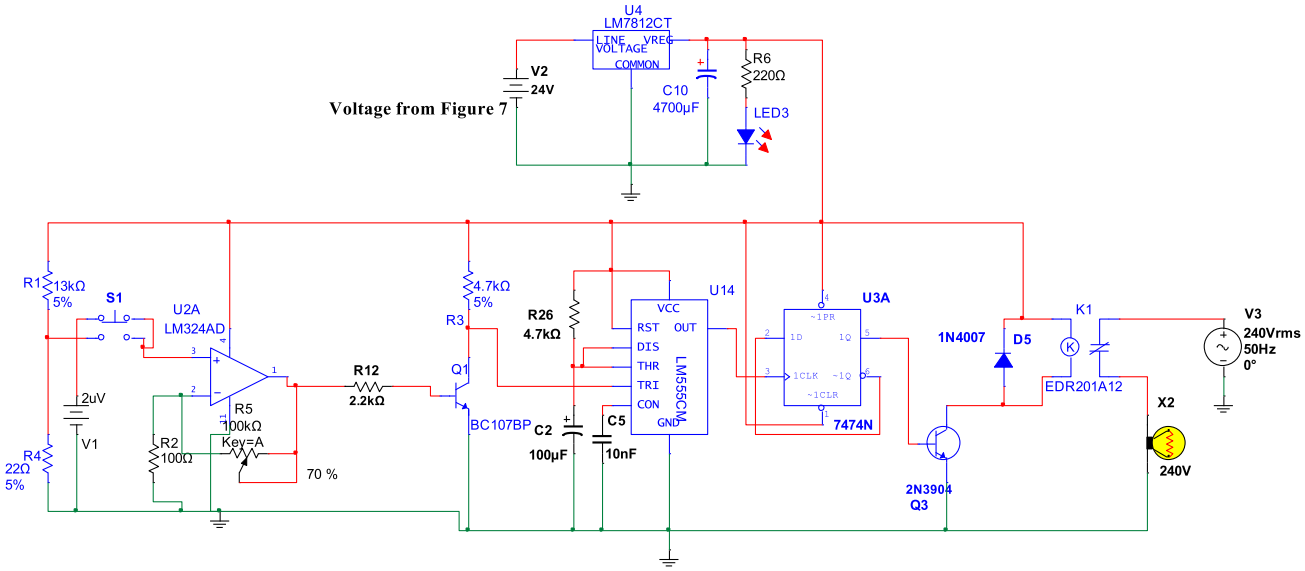

FIGURE 23. Sound operated switching system showing when switch 1 is closed (key pressed).

to low state, making the coil of the relay to be magnetized and forcing the normally open to close. The action of the transistor initiate driving the circuit attached to the unit ON or OFF, depending on the state it was before receiving the present signal. The action of this is shown in Figure 22.

The third stage of the secured automation switching system is the sound operated module, which uses sound to switch ON or OFF a gadget connected to it. The action is like the second stage of the secured automation switching system, the only difference being that it uses a microphone to pick up a sound and convert it to an electrical signal (voltage). The voltage seen at the non-inverting terminal of the operational amplifier is about 20mV, which is then amplified using LM324 Op-Amp. When amplified, the base of the transistor Q1 (BC107BP) is biased and helps to trigger the timing circuit, which in turn clocks the flip-flop, allowing it to change state from either low to high, depending on the state it was before receiving the present signal. The figure (Figure 23) shows when the system pick-up the signal.

VI. CONCLUSION

This study presents the design and implementation of a secured smart home switching system based on wireless communications and self-energy harvesting. The proposed system introduces main access control of the building's electricity, energy harvesting, and storage for the active electronic components of the circuitries, and wireless communication for smart switches and sockets. The access control contains four stages: a control unit, a comparator unit, a memory unit, and the switching unit. The access control system provides a means of access control by having a security keypad that switches ON or OFF the building's electricity, provided

the user knows the security pin code (8 coded pins). Also, the system harvest and store energy for all the active electronic devices using a photovoltaic system with ultracapacitor energy buffer; system utilized smart sockets and switches and MQTT communication protocol for ease of controlling the energy usage. Testing and the experimental results show improved energy management in a building using the prototype of the system. In the system power supply, the results are shown during two days of operation, corresponding to cycles of charging and discharging of the ultracapacitor, which gives an idea of the supply continuously of power to all loads. The night time was simulated by turning off the switch, which opens the line from the solar panel to the loads and set the panel to its open circuit voltage; The ultracapacitor with a rating of 12V when fully charged and its charge remains higher than 5V during the night-time. Therefore, the entire system power supply was independent of the main power supply to the building. Also, the security of the entire smart home system including the smart control of home appliances was guaranteed.

REFERENCES

[1] K. Romer and F. Mattern, "The design space of wireless sensor networks," *IEEE Wireless Commun.*, vol. 11, no. 6, pp. 54–61, Dec. 2004.

[2] J. Y. Jung and J. W. Lee, "ZigBee device access control and reliable data transmission in ZigBee based health monitoring system," in *Proc. 10th Int. Conf. Adv. Commun. Technol. (ICACT)*, Gangwon-Do, South Korea, Feb. 2008, pp. 795–797.

[3] I.-K. Hwang and J.-W. Baek, "Wireless access monitoring and control system based on digital door lock," *IEEE Trans. Consum. Electron.*, vol. 53, no. 4, pp. 1724–1730, Nov. 2007.

[4] W. K. Park, I. Han, and K. R. Park, "ZigBee based dynamic control scheme for multiple legacy IR controllable digital consumer devices," *IEEE Trans. Consum. Electron.*, vol. 53, no. 1, pp. 172–177, Feb. 2007.

[5] C.-H. Lien, Y.-W. Bai, and M.-B. Lin, "Remote-controllable power outlet system for home power management," *IEEE Trans. Consum. Electron.*, vol. 53, no. 4, pp. 1634–1641, Nov. 2007.

[6] C. D. Nugent, D. D. Finlay, P. Fiorini, Y. Tsumaki, and E. Prassler, "Editorial home automation as a means of independent living," *IEEE Trans. Autom. Sci. Eng.*, vol. 5, no. 1, pp. 1–8, Jan. 2008.

[7] M. Chan, D. Estève, C. Escriba, and E. Campo, "A review of smart homes—Present state and future challenges," *Comput. Methods Programs Biomed.*, vol. 91, no. 1, pp. 55–81, Jul. 2008.

[8] G. Song, F. Ding, W. Zhang, and A. Song, "A wireless power outlet system for smart homes," *IEEE Trans. Consum. Electron.*, vol. 54, no. 4, pp. 1688–1691, Nov. 2008.

[9] J. Ahmed and Z. Salam, "An improved method to predict the position of maximum power point during partial shading for PV arrays," *IEEE Trans. Ind. Informat.*, vol. 11, no. 6, pp. 1378–1387, Dec. 2015.

[10] L. Cristaldi, M. Faifer, M. Rossi, and S. Toscani, "An improved model-based maximum power point tracker for photovoltaic panels," *IEEE Trans. Instrum. Meas.*, vol. 63, no. 1, pp. 63–71, Jan. 2014.

[11] P. Barrade, S. Delalay, and A. Rufer, "Direct connection of supercapacitors to photovoltaic panels with on–off maximum power point tracking," *IEEE Trans. Sustain. Energy*, vol. 3, no. 2, pp. 283–294, Apr. 2012.

[12] J. H. Cho and W.-P. Hong, "Power control and modeling of a solar-ultra capacitor hybrid energy system for stand-alone applications," in *Proc. ICCAS*, 2010, pp. 811–814.

[13] L. Gao, R. A. Dougal, S. Liu, and A. P. Iotova, "Parallel-connected solar PV system to address partial and rapidly fluctuating shadow conditions," *IEEE Trans. Ind. Electron.*, vol. 56, no. 5, pp. 1548–1556, May 2009.

[14] E. Koutroulis and K. Kalaitzakis, "Design of a maximum power tracking system for wind-energy-conversion applications," *IEEE Trans. Ind. Electron.*, vol. 53, no. 2, pp. 486–494, Apr. 2006.

[15] A. Woyte, V. Van Thong, K. Purchala, R. Belmans, and J. Nijs, "Quantifying the occurrence and duration of power fluctuations introduced by photovoltaic systems," in *Proc. IEEE Power Tech Conf.*, vol. 3, Jun. 2003, p. 7.

[16] J. Han, C.-S. Choi, and I. Lee, "More efficient home energy management system based on ZigBee communication and infrared remote controls," *IEEE Trans. Consum. Electron.*, vol. 57, no. 1, pp. 85–89, Feb. 2011.

[17] K. Gill, S.-H. Yang, F. Yao, and X. Lu, "A ZigBee-based home automation system," *IEEE Trans. Consum. Electron.*, vol. 55, no. 2, pp. 422–430, May 2009.

[18] G. Song, Z. Wei, W. Zhang, and A. Song, "A hybrid sensor network system for home monitoring applications," *IEEE Trans. Consum. Electron.*, vol. 53, no. 4, pp. 1434–1439, Nov. 2007.

[19] W. Huiyong, W. Jingyang, and H. Min, "Building a smart home system with WSN and service robot," in *Proc. 5th Int. Conf. Meas. Technol. Mechatronics Autom.*, Hong Kong, 2013, pp. 353–356.

[20] M. S. Pan, L. W. Yeh, Y. A. Chen, Y. H. Lin, and Y. C. Tseng, "A WSN-based intelligent light control system considering user activities and profiles," *IEEE Sensors J.*, vol. 8, no. 10, pp. 1710–1721, Oct. 2008.

[21] C. Suh and Y. B. Ko, "Design and implementation of intelligent home control systems based on active sensor networks," *IEEE Trans. Consum. Electron.*, vol. 54, no. 3, pp. 1177–1184, Aug. 2008.

[22] K. D. Nguyen, I.-M. Chen, Z. Luo, S. H. Yeo, and H. B.-L. Duh, "A wearable sensing system for tracking and monitoring of functional arm movement," *IEEE/ASME Trans. Mechatronics*, vol. 16, no. 2, pp. 213–220, Apr. 2011.

[23] C.-H. Lien, C.-H. Lin, Y.-W. Bai, M.-F. Liu, and M.-B. Lin, "Remotely controllable outlet system for home power management," in *Proc. IEEE 10th Int. Symp. Consum. Electron. (ISCE)*, Saint Petersburg, Russia, Jul. 2006, pp. 1–6.

[24] C.-H. Lien, H.-C. Chen, Y.-W. Bai, and M.-B. Lin, "Power monitoring and control for electric home appliances based on power line communication," in *Proc. IEEE Int. Instrum. Meas. Technol. Conf. (IMTC)*, Vancouver, BC, Canada, May 2008, pp. 2179–2184.

[25] C.-H. Lien, J.-C. Lin, and Y.-W. Bai, "Design and implementation of a remotely controllable UPS outlet system," in *Proc. 12th IEEE Int. Symp. Consum. Electron. (ISCE)*, Vilamoura, Portugal, Apr. 2008, pp. 1–4.

[26] Y.-W. Bai and C.-H. Hung, "Remote power On/Off control and current measurement for home electric outlets based on a low-power embedded board and ZigBee communication," in *Proc. 12th IEEE Int. Symp. Consum. Electron. (ISCE)*, Vilamoura, Portugal, Apr. 2008, pp. 1–4.

[27] H. G. R. Tan, A. C. Tan, M. Iriana, and V. H. Mok, "Power socket programmable circuit breaker system," in *Proc. IEEE 2nd Int. Power Energy Conf. (PECon)*, Johor Bahru, Malaysia, Dec. 2008, pp. 574–577.

[28] J. Han, H. Lee, and K. R. Park, "Remote-controllable and energy-saving room architecture based on ZigBee communication," *IEEE Trans. Consum. Electron.*, vol. 55, no. 1, pp. 264–268, Feb. 2009.

[29] C. H. Lien, Y. W. Bai, H. C. Chen, and C. H. Hung, "Home appliance energy monitoring and controlling based on power line communication," in *Proc. IEEE Int. Symp. Consum. Electron. (ISCE)*. Las Vegas, Nev, USA: IEEE Consumer Electronics Society, Jan. 2009, pp. 1–2.

[30] M. Lee, Y. Uhm, Y. Kim, G. Kim, and S. Park, "Intelligent power management device with middleware based living pattern learning for power reduction," *IEEE Trans. Consum. Electron.*, vol. 55, no. 4, pp. 2081–2089, Nov. 2009.

[31] A. L. Lentine *et al.*, "An intelligent electrical outlet for autonomous load control for electric power grids with a large percentage of renewable resources," in *Proc. IEEE Power Energy Soc. Gen. Meeting (PES)*. San Diego, CA, USA: IEEE Power & Energy Society, Jul. 2012, pp. 1–8.

[32] L. J. Kau, B. L. Dai, C. S. Chen, and S. H. Chen, "A cloud network-based power management technology for smart home systems," in *Proc. IEEE Int. Conf. Syst., Man, Cybern. (SMC)*, Seoul, South Korea, Oct. 2012, pp. 2527–2532.

[33] G. Horvat, D. Vinko, and D. Žagar, "Household power outlet overload protection and monitoring using cost effective embedded solution," in *Proc. IEEE Mediterranean Conf. Embedded Comput. (MECO)*, Budva, Montenegro, Jun. 2013, pp. 242–246.

[34] T. M. Fernàndez-Caramés, "An intelligent power outlet system for the smart home of the Internet of Things," *Int. J. Distrib. Sensor Netw.*, vol. 11, no. 11, 2015, Art. no. 214805.

[35] T. H. Arampatzis, J. Lygeros, and S. Manesis, "A survey of applications of wireless sensors and wireless sensor networks," in *Proc. Medit. Conf. Control Autom. (MED)*. Limassol, Cyprus: IEEE Control Systems Society, Jun. 2005, pp. 719–724.

[36] S. Barro-Torres, T. M. Fernández-Caramés, H. J. Pérez-Iglesias, and C. J. Escudero, "Real-time personal protective equipment monitoring system," *Comput. Commun.*, vol. 36, no. 1, pp. 42–50, 2012.

[37] S. J. Isaac, G. P. Hancke, H. Madhoo, and A. Khatri, "A survey of wireless sensor network applications from a power utility's distribution perspective," in *Proc. EEE African Conf. (Africon)*, Livingstone, Zambia, Sep. 2011, pp. 1–5.

[38] S. J. Barro, T. M. Fernández-Caramés, and C. J. Escudero, "Enabling collaborative musical activities through wireless sensor networks," *Int. J. Distrib. Sensor Netw.*, vol. 8, no. 3, 2012, Art. no. 314078.

[39] (Jun. 2015). *ZigBee IP*. [Online]. Available: http://www.zigbee.org/ip

[40] *IPv6 over Low-Power Wireless Personal Area Networks (6LoWPANs): Overview, Assumptions, Problem Statement, and Goals*, document RFC 4919, IETF 6LoWPAN Working Group, 2008.

[41] F. Mattern and C. Floerkemeier, "From the Internet of computers to the Internet of Things," in *From Active Data Management to Event-Based Systems and More* (Lecture Notes in Computer Science), vol. 6462. Berlin, Germany: Springer, 2010, pp. 242–259.

[42] A. H. Shajahan and A. Anand, "Data acquisition and control using Arduino-Android platform: Smart plug," in *Proc. Int. Conf. Energy Efficient Technol. Sustainability*, Nagercoil, India, Apr. 2013, pp. 241–244.

[43] T. M. Fernández-Caramés, "An intelligent power outlet system for the smart home of the Internet of Things," *Int. J. Distrib. Sensor Netw.*, vol. 11, no. 11, p. 214805, 2015.

[44] M. S. Ahmed *et al.*, "Smart plug prototype for monitoring electrical appliances in home energy management system," in *Proc. IEEE Student Conf. Res. Develop.*, Kuala Lumpur, Malaysia, Dec. 2015, pp. 32–36.

[45] N. K. Suryadevara, S. C. Mukhopadhyay, S. D. T. Kelly, and S. P. S. Gill, "WSN-based smart sensors and actuator for power management in intelligent buildings," *IEEE/ASME Trans. Mechatronics*, vol. 20, no. 2, pp. 564–571, Apr. 2015.

[46] R. Raju, M. Vishwanath, and A. Rajkiran, "WSN based smart sensors and actuator for power management in intelligent buildings," *Int. J. Sci. Eng. Technol. Res.*, vol. 4, no. 13, pp. 2390–2393, May 2015.

[47] P. Santoro, V. Calderaro, V. Galdi, and A. Piccolo, "Active smart socket design to perform local control of power demand in residential units," in *Proc. IET Int. Conf. Power Electron.*, Scotland, U.K., 2016, pp. 1–5.

[48] Y. Han, J. Hyun, T. Jeong, J.-H. Yoo, and J. W.-K. Hong, "A smart home control system based on context and human speech," in *Proc. 18th Int. Conf. Adv. Commun. Technol.*, Pyeongchang, South Korea, Jan./Feb. 2016, pp. 1–2.

[49] B. Kang, M.-I. Choi, S. Jeon, Y. Hwang, and S. Park, "Design and implementation of personal ICT asset management service based on smart power socket," in *Proc. IEEE Int. Conf. Consum. Electron.*, Las Vegas, NV, USA, Jan. 2016, pp. 115–116.

[50] A. Singaravelan and M. Kowsalya, "Design and implementation of standby power saving smart socket with wireless sensor network," *Procedia Comput. Sci.*, vol. 92, pp. 305–310, Aug. 2016.

[51] M. H. Rahim, A. Khalid, N. Javaid, M. Alhussein, K. Aurangzeb, and Z. A. Khan, "Energy efficient smart buildings using coordination among appliances generating large data," *IEEE Access*, vol. 6, pp. 34670–34690, 2018.

[52] M. H. Rahim, A. Khalid, N. Javaid, M. Ashraf, K. Aurangzeb, and A. Altamrah, "Exploiting game theoretic based coordination among appliances in smart homes for efficient energy utilization," *Energies*, vol. 11, no. 6, p. 1426, 2018.

[53] E. Al-Hassan, H. Shareef, M. M. Islam, A. Wahyudie, and A. A. Abdrabou, "Improved smart power socket for monitoring and controlling electrical home appliances," *IEEE Access*, vol. 6, pp. 49292–49305, 2018.

[54] R. W. Erickson and D. Maksimovic, *Fundamentals of Power Electronics*, 2nd ed. New York, NY, USA: Springer, 2001.

[55] M. G. Villalva and E. R. Filho, "Input-controlled buck converter for photovoltaic applications: Modeling and design," in *Proc. 4th IET Conf. Power Electron., Mach. Drives*, 2008, pp. 505–509.

ADAMU MURTALA ZUNGERU (M'09–SM'18) received the B.Eng. degree from Nottingham University, the M.Sc. degree from Ahmadu Bello University, Zaria, Nigeria, and the Ph.D. degree from the Federal University of Technology, Minna, Nigeria. He was a Research Fellow with the Massachusetts Institute of Technology, USA, where he also received a Postgraduate Teaching Certificate, in 2014. In 2015, he was a Senior Lecturer and the Head of the Electrical and Electronics Engineering Department, Federal University Oye Ekiti, Nigeria. He is currently a Senior Lecturer and the Coordinator of computer and telecommunications engineering programme at the Botswana International University of Science and Technology.

He has also authored four Academic books and more than 60 international research articles in reputable Journals, including the IEEE Systems Journal, the IEEE Internet of Things Journal, the *Journal of Network and Computer Applications* Elsevier and others, with over 630 citations and H-Index of 12. He has also served as an International Reviewer to the IEEE Transactions on Industrial Informatics, the IEEE Sensors, the IEEE Access, the IEEE Transactions on Mobile Computing, the IEEE Transactions on Sustainable Computing, *Journal of Network and Computer Applications* Elsevier, and numerous others. He is currently serving as the Chairman of IEEE Botswana Sub-Section. He is a Registered Engineer with the Council for The Regulation of Engineering in Nigeria (COREN), and the Association for Computing Machinery, USA. He is the Inventor of a Termite-Hill Routing Algorithm for Wireless Sensor Networks and have two of his Patent applications registered with the World Intellectual Property Organization.

JWAONE GABOITAOLELWE received the B.Eng. degree in computer engineering from the Botswana International University of Science and Technology, in 2018, where he is currently pursuing the M.Eng. degree in computer and telecommunications engineering with the Department of Electrical, Computer, and Telecommunications Engineering and he is also a Research Assistant. He has one of his Patent applications registered with the World Intellectual Property Organization. His research interests include wireless sensor networks, smart devices, and electronics design and applications.

BAKARY DIARRA (M'10) received the Ph.D. degree in ultrasound imaging from Claude Bernard University Lyon 1, France, where was in co-supervision with the University of Florence, Italy. He was an Assistant Professor with Claude Bernard University of Lyon for one year with the Electrical Engineering Department and was a Postdoctoral Researcher with the FOCAS Lab, Dublin Institute of Technology, Ireland, in 2015, where he worked on tissue mimicking materials for the breast cancer screening and biopsy. He was a Lecturer with the Department of Electrical, Computer and Telecommunications Engineering, Botswana International University of Science and Technology, Botswana. He is currently a Lecturer of electrical engineering with the Institute of Applied Sciences, University of Sciences, Techniques and Technologies of Bamako, Bamako, Mali. He has published more than 14 papers in international journals and conferences. His research interests include design and the optimization of 2D sparse arrays and power systems.

JOSEPH M. CHUMA (M'97) received the Ph.D. degree in electronic systems engineering from the University of Essex, in 2001. He was with the University of Botswana as an Associate Professor and the Dean of the Faculty of Engineering and Technology. He joined as an Associate Professor in telecommunications engineering with the Department of Electrical, Computer and Telecommunication Engineering, Botswana International University of Science and Technology, in 2014. He has more than 24 years of experience in teaching and research, consultancy, and human resources development in telecommunication, computer, and electrical and electronics engineering, including CISCO computer networking. He has authored or co-authored three books, three book chapters, and many refereed published scholarly/scientific journal articles in telecommunications engineering. He holds three patents. He is a member of several professional bodies among which includes the IET, U.K., and BIE, Botswana. He is a Professional Engineer registered with the Botswana Engineers Registration Board.

LI-MINN ANG (SM'09) received the B.Eng. and Ph.D. degrees from Edith Cowan University, Australia. He is currently an Associate Professor of computer systems and networks in Australia. He has published more than a 100 papers in journals and international refereed conferences and has authored the book *Wireless Multimedia Sensor Networks on Reconfigurable Hardware*. His research interests include visual information processing, embedded systems, wireless sensor networks, reconfigurable computing, the development of real-world computer systems, large-scale data gathering in wireless multimedia sensor systems, big data analytics for sensor networks, the multimedia Internet-of-Things, and the Internet of Vehicles. He is a Fellow of the Higher Education Academy, U.K.

LONE KOLOBE received the B.Eng. degree in telecommunications engineering from the Botswana International University of Science and Technology, in 2018, where he is currently pursuing the M.Eng. degree in computer and telecommunications engineering with the Department of Electrical, Computer, and Telecommunications Engineering and he is also a Research Assistant. His research interests include wireless sensor networks, smart devices, and electronics design and applications.

MPHO DAVID received the B.Eng. degree in computer engineering from the Botswana International University of Science and Technology, in 2018, where he is currently pursuing the M.Eng. degree in computer and telecommunications engineering with the Department of Electrical, Computer, and Telecommunications Engineering and he is also a Research Assistant. His research interests include sensor networks, smart devices, and optical communications.

ISHMAEL ZIBANI received the B.Eng. degree from Aberdeen University, U.K., and the M.Sc. degree from Heriot-Watt University, Scotland. He is currently pursuing the Ph.D. degree in engineering with the University of Botswana. His research interests include camless systems for internal combustion engines, software defined radio, a relatively new field in communication/electronic systems, and digital system design. He is also working on other projects include development of affordable water pumps for small-scale farmers, Botswana, powering RFID devices from body heat. He is also actively involved in supervising bachelor's/master's students in their final year projects.